2016 EDITION

EARTHMOVER TYRES

TECHNICAL DATA

MICHELIN

A better way forward

IDENTIFICATION OF EARTHMOVER TYRES

Michelin tyres are designed for a specific use as specified in this catalog.
Any other use constitutes an abnormal use.

However, in some cases, Michelin may issue a waiver which will specify
the conditions and the permitted operational limits for a specific application.

Michelin disclaims any responsibility for any abnormal use of its tyres
or absence of any express derogatory written permission.

Unless otherwise specified, Michelin off-the-road tyres comply with internationally
accepted standards that are established by TRA (Tire and Rim Association),
ETRTO (European Tyre and Rim Technical Organisation),
JATMA (Japan Automobile Tyre Manufacturers Association),
and/or ISO (International Standards Organisation).
Among other things, the standards encompass load capacity, inflation pressure,
overall diameter, overall width, and related valves and rims.
Some differences may exist between these standards. In such case,
Michelin refers to the most appropriate.

PLEASE NOTE

Tyre load and pressure tables
(pages 26 to 81)

These tables are classified according to the various applications
of earthmoving machines.

In the load and pressure tables, the shaded boxes indicate
the normalized values.
These values reflect the optimal use, the best balance of performances.

These values are given for information purpose only and may not be used for legal or statutory actions.

2016 edition N° 31
The most current version is available on www.michelinearthmover.com

CONTENT

CLASSIFICATION OF MICHELIN TYRES

ACCORDING TO THEIR ASPECT RATIO

The wide diversity of earthmover machines and their uses requires the development of numerous ranges of tyres.

Earthmover tyres differ from those mounted on cars or commercial vehicles by:

- Their size and weight
- Their tread depths which are proportionally greater
- More reinforcements to deal with the harsher conditions of use

There are several families of earthmover tyres, characterized by their aspect ratio H/S (ratio in % between the height of the sidewall H and the section width of the tyre S).

H = standard section height *(see page 21)* - **S = standard section width** *(see page 21)*

100 SERIES (STANDARD)

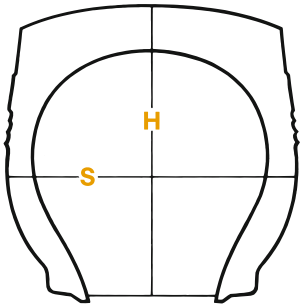

The H/S ratio is approximately equal to 1.

1

$\frac{H}{S} = 100\ \%$

The section width is expressed in inches with two decimal places.
Examples: 18.00 R 33
Tyres for rigid trucks, handling equipment, etc…
The aspect ratio is not indicated in the size designation.

80 SERIES

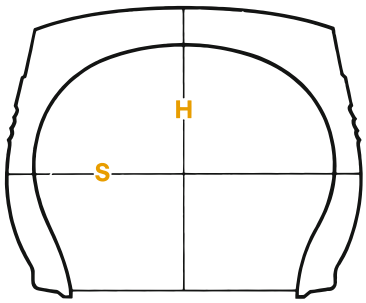

The H/S ratio is approximately equal to 0.80.

0,80

$\frac{H}{S} = 80\ \%$

The section width is expressed in inches and fractions of an inch.
Examples: 8.25 R 15, 20.5 R 25
The aspect ratio is not indicated in the size designation. or in inches followed by the number 80
Example: 59/80 R 63
Tyres for rigid trucks, articulated dumpers, loaders, handling equipment, etc…

65 SERIES

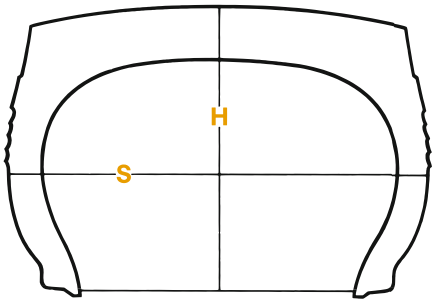

The H/S ratio is approximately equal to 0.65.

0,65

$\frac{H}{S} = 65\ \%$

The section width is expressed in inches or in millimeters, followed by the number 65.
Examples: 35/65 R 33, 750/65 R 25
Tyres for large loaders, articulated trucks, etc…

90 SERIES

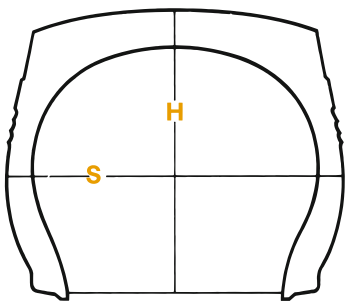

The H/S ratio is approximately equal to 0.90.

0,90

$\frac{H}{S} = 90\ \%$

The section width is expressed in inches followed by the number 90.
Example: 50/90 R 57
Tyres for rigid trucks

Other series of tyres are also available: 95 series, 75 series, etc.

ACCORDING TO THE STANDARDISED USAGE (ISO-ETRTO-TRA-JATMA*)

The four main categories of earthmover tyre are defined by their use. The category to which it belongs is indicated on the sidewall of the tyre.

This is an international classification:

- **C** Compactor
- **G** Grader
- **E** Earthmoving
- **L** Loader and bulldozer

* ***ISO***: *International Standard Organisation*
ETRTO: *European Tyre and Rim Organisation*
TRA: *Tire and Rim Association*
JATMA: *Japan Automobile Tyre Manufacturers Association*

Within these categories, there are different tread depths and special tread patterns, for very specific uses.
These are identified by a number.
They must be chosen according to the type of ground and the tyre's condition of use.
The letter "S" indicates a smooth tread; *example: L-5S.*

- **1** Ribbed (normal tread depth)
- **2** Traction (normal tread depth)
- **3** Normal (normal tread depth)
- **4** Deep (deep tread)
- **5** Flotation (normal tread)

ACCORDING TO THEIR TREAD DEPTHS

The tread depth 'SUPER, D1, D2' is sometimes indicated on the sidewall tyre.

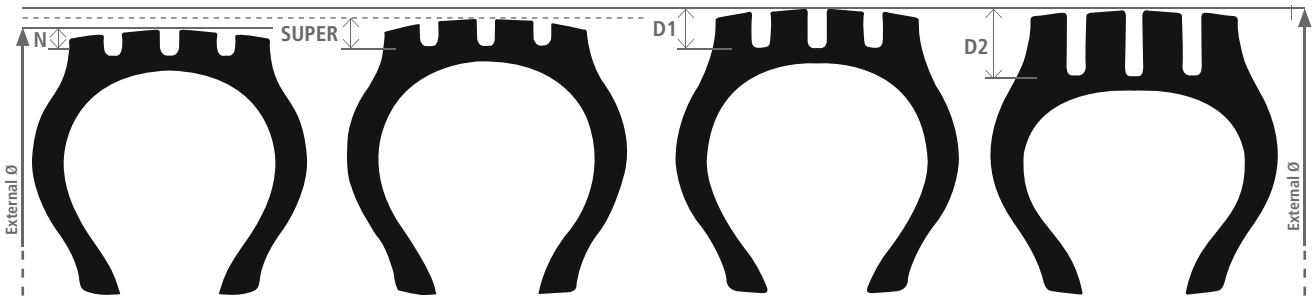

(E2 - E3 - L2 -L3 - G2 - G3)
Traction / Regular tread
Michelin designation:
N (Normal)

(SUPER E3, SUPER L3)
Regular tread
Michelin designation:
SUPER
(N < SUPER < D1)

(E4 - L4 - G4)
Deep tread
Aggressive ground
Michelin designation:
D1 = N x 1,5

(L5)
Extra deep tread
Abrasive and aggressive ground
Michelin designation:
D2 = N x 2,5

SUMMARY

CODE	TREAD PATTERN	APPLICATION
C1	SMOOTH	compactor
E1	RIBBED	Transport
E2	TRACTION	
E3	ROCK	
E4	ROCK (deep tread)	
E7	FLOTATION	
G1	RIBBED	Grader
G2	TRACTION	
G3	ROCK	
G4	ROCK (deep tread)	
G5	ROCK (very-deep tread)	
L2	TRACTION	Loader Bulldozer
L3	ROCK	
L4	ROCK (deep tread)	
L5	ROCK (very-deep tread)	
L3S	SMOOTH	
L4S	SMOOTH (deep tread)	
L5S	SMOOTH (very-deep tread)	

In addition, Michelin provides complementary identification to some earthmover tyres:
T = Traction, R = Rock, V = speed, F = Flotation, P = Multi purpose, S/R = Smooth/Rock
e.g.: L3T "Normal tread depth tyre (L3; Standardized identification code) where traction is needed (T; Michelin code)"

TYRE MARKINGS

WHAT YOU CAN LEARN FROM THE SIDEWALL MARKING

MICHELIN
XMINED2

1. Nominal section width of the tyre (in inches): 35
2. Tyre series: aspect ratio = 0.65
3. Radial construction: R
4. Rim diameter (in inches): 33
5. Load index of the tyre: **
6. Type of use: loader (L) with deep tread (5)
7. Radial tyre
8. Tyre for loader
9. Tubeless tyre
10. Manufacturer: MICHELIN
11. Tread pattern: XMINED2

MICHELIN
X-CRANE +

- **Radial** construction
- Nominal section width of the tyre (in mm): **525**
- Tyre series: **aspect ratio = 0.80**
- Rim diameter (in inches): **25**
- Tubeless
- Brand: **MICHELIN**
- Tread pattern: **X-CRANE +**

12. Load index of the tyre: **170**
13. Reference speed symbol of the tyre: **F**
14. Regroovable

MICHELIN
XDR2

- **Radial** construction
- Nominal section width of the tyre (in inches): **37**
- Rim diameter (in inches): **57**
- Tubeless
- Brand: **MICHELIN**

15. Tyre compound: **B4** *(explanation page 7)*

- Tread pattern: **XDR2**
- Identification code: **E4**
  (transport, "deep" tread)
- Load capacity: **

DIFFERENT MICHELIN EARTHMOVER TYRE COMPOUNDS

TYPE A4
Particularly resistant to cuts, tread tearing and abrasion on very rough surfaces. **minimum TKPH (TMPH) (#)**

TYPE A
Particularly resistant to cuts, tread tearing and abrasion at average speeds which are higher than those for A4 (above). **low TKPH (TMPH) (#)**

TYPE MB4
Compromise solution between abrasion resistance and average speed on rough surfaces (from 49 inches) with a higher wear resistance than the Type B4. **moderate TKPH (TMPH) (#)**

TYPE B4
Compromise solution between abrasion resistance and average speed on rough surfaces. **moderate TKPH (TMPH) (#)**

TYPE B
Higher resistance to internal heat generation on surfaces which are not particularly rough. **average TKPH (TMPH) (#)**

TYPE MC4
Adapted to running on long cycles at high speeds on well-maintained roads with a higher wear resistance than the Type C4. **high TKPH (TMPH) (#)**

TYPE C4
Adapted to running on long cycles at high speeds on well-maintained roads. **high TKPH (TMPH) (#)**

TYPE C
Very high resistance to high average speeds on long cycles run on well-maintained roads. **very high TKPH (TMPH) (#)**

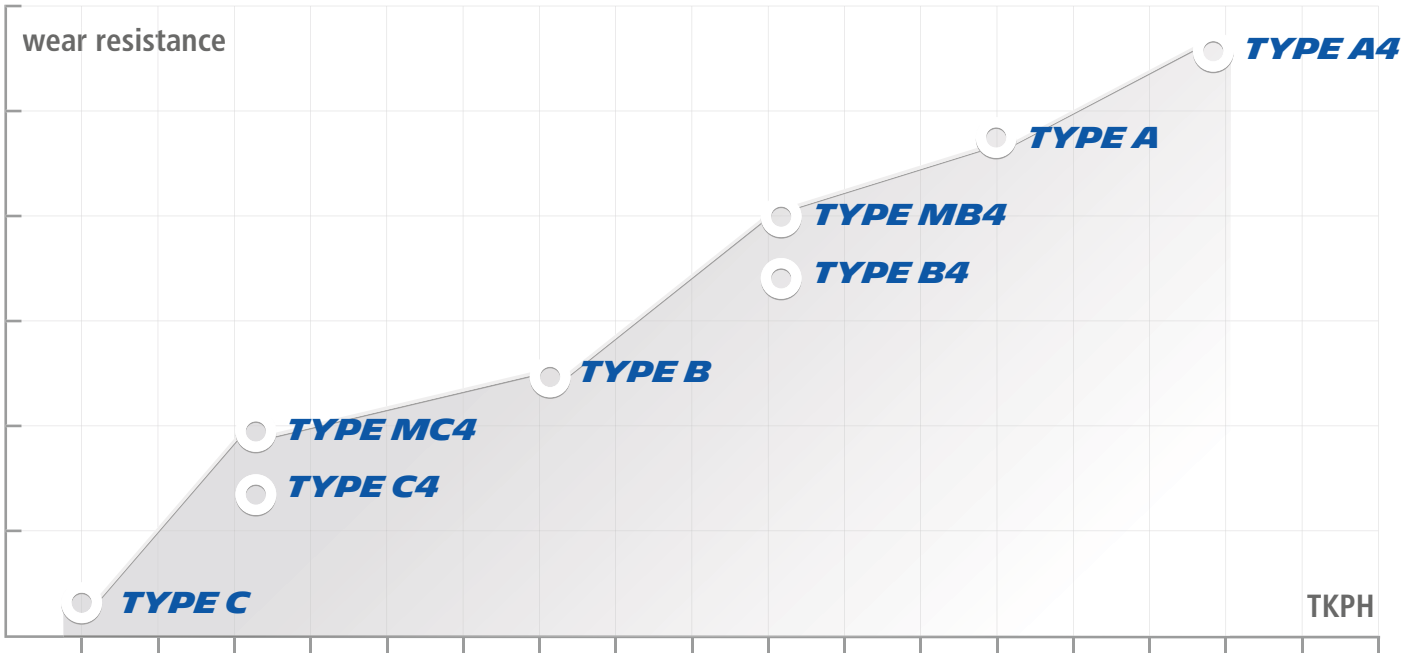

TKPH: Ton kilometer per hour
TMPH: Ton mile per hour
(#) see page 102

LOAD INDEX - SPEED SYMBOL

Some tyres bear a load index and a speed symbol.

LOAD INDEX (LI) AND MAXIMUM LOAD (KG/LB)

The LOAD INDEX is a numerical code which indicates the maximum load a tyre can carry at the speed corresponding to its speed symbol, under specified conditions.

LI	MAXIMUM LOAD		LI	MAXIMUM LOAD		LI	MAXIMUM LOAD		LI	MAXIMUM LOAD		LI	MAXIMUM LOAD	
	KG	LB		KG	LB		KG	LB		KG	LB		KG	LB
120	1 400	3 090	150	3 350	7 390	180	8 000	17 640	210	19 000	41 890	240	45 000	99 210
121	1 450	3 200	151	3 450	7 610	181	8 250	18 190	211	19 500	43 000	241	46 250	101 960
122	1 500	3 310	152	3 550	7 830	182	8 500	18 740	212	20 000	44 100	242	47 500	104 720
123	1 550	3 420	153	3 650	8 050	183	8 750	19 290	213	20 600	45 420	243	48 750	107 470
124	1 600	3 530	154	3 750	8 270	184	9 000	19 840	214	21 200	46 750	244	50 000	110 250
125	1 650	3 640	155	3 875	8 540	185	9 250	20 390	215	21 800	48 070	245	51 500	113 540
126	1 700	3 750	156	4 000	8 820	186	9 500	20 940	216	22 400	49 390	246	53 000	117 950
127	1 750	3 860	157	4 125	9 090	187	9 750	21 500	217	23 000	50 700	247	54 500	120 150
128	1 800	3 970	158	4 250	9 370	188	10 000	22 050	218	23 600	52 040	248	56 000	123 480
129	1 850	4 080	159	4 375	9 650	189	10 300	22 710	219	24 300	53 580	249	58 000	127 890
130	1 900	4 190	160	4 500	9 920	190	10 600	23 370	220	25 000	55 120	250	60 000	132 300
131	1 950	4 300	161	4 625	10 200	191	10 900	24 030	221	25 750	56 780	251	61 500	135 580
132	2 000	4 410	162	4 750	10 470	192	11 200	24 690	222	26 500	58 430	252	63 000	138 890
133	2 060	4 540	163	4 875	10 750	193	11 500	25 360	223	27 250	60 070	253	65 000	143 300
134	2 120	4 670	164	5 000	11 020	194	11 800	26 020	224	28 000	61 740	254	67 000	147 710
135	2 180	4 810	165	5 150	11 350	195	12 150	26 790	225	29 000	63 940	255	69 000	152 120
136	2 240	4 940	166	5 300	11 690	196	12 500	27 560	226	30 000	66 150	256	71 000	156 530
137	2 300	5 070	167	5 450	12 020	197	12 850	28 330	227	30 750	67 790	257	73 000	160 930
138	2 360	5 200	168	5 600	12 350	198	13 200	29 100	228	31 500	69 460	258	75 000	165 340
139	2 430	5 360	169	5 800	12 790	199	13 600	29 990	229	32 500	71 660	259	77 500	170 660
140	2 500	5 510	170	6 000	13 230	200	14 000	30 870	230	33 500	73 870	260	80 000	176 400
141	2 575	5 680	171	6 150	13 560	201	14 500	31 970	231	34 500	76 070	261	82 500	181 880
142	2 650	5 840	172	6 300	13 890	202	15 000	33 070	232	35 500	78 280	262	85 000	187 390
143	2 725	6 010	173	6 500	14 330	203	15 500	34 180	233	36 500	80 480	263	87 500	192 900
144	2 800	6 170	174	6 700	14 770	204	16 000	35 280	234	37 500	82 690	264	90 000	198 450
145	2 900	6 390	175	6 900	15 210	205	16 500	36 380	235	38 750	85 430	265	92 500	203 920
146	3 000	6 610	176	7 100	15 650	206	17 000	37 480	236	40 000	88 200	266	95 000	209 440
147	3 075	6 780	177	7 300	16 090	207	17 500	38 590	237	41 250	90 940	267	97 500	214 950
148	3 150	6 950	178	7 500	16 530	208	18 000	39 690	238	42 500	93 710	268	100 000	220 500
149	3 250	7 170	179	7 750	17 090	209	18 500	40 790	239	43 750	96 470	269	103 000	227 370

SPEED SYMBOLS

The SPEED SYMBOL indicates the maximum speed at which the tyre can carry a load corresponding to its load index, under specified conditions.

CODE	A2	A3	A4	A5	A6	A8	B	C	D	E	F	G
speed (km/h)	10	15	20	25	30	40	50	60	65	70	80	90
speed (mph)	6	9	12	15	19	25	31	37	40	43	50	56

Examples of tyre marking:

23.5 R 25 X-SUPER TERRAIN TL 185 B ; this tyre is able to carry 9250 kg at a speed of 50 km/h (20 390 lb at 31 mph)
445/95 R 25 X-CRANE TL 174 F ; this tyre is able to carry 6 700 kg at a maximum speed of 80 km/h (14 770 lb at 50 mph)

It is imperative:
- **not to exceed the permitted maximum speed of the tire**
- **not to exceed the permitted maximum distances in one hour as indicated in the tables of tire characteristics**
- **that, at the time of fitting, the various markings be checked, in order to be certain that the tyre is suitable for operation at the maximum allowed vehicle speed and load.**

EQUIVALENCE OF RESISTANCE INDEX

To be used as a reference for the replacement of a bias ply tire by a MICHELIN radial tire.

SIZES AND MARKINGS	WORK MACHINES PR	TRANSPORT MACHINES PR	SIZES AND MARKINGS	WORK MACHINES PR	TRANSPORT MACHINES PR	SIZES AND MARKINGS	WORK MACHINES PR	TRANSPORT MACHINES PR
7.50 R 15	12		17.5 R 25 **	20	24	35/65 R 33 *	36	
8.25 R 15	12		18.00 R 25 *	24		35/65 R 33 ** (1)		
10.00 R 15			445/95 R 25 (174E, 177E, 177F)			35/65 R 33 E4**** L4*** (1)		
350/65 R 15 (1)			445/80 R 25 (170E)			37.5 R 33 **		48
14.5 R 15			18.00 R 25 **		36	21.00 R 35 **		44
400/80 R 15 (1)			20.5 R 25 *	24		24.00 R 35 **		48
9.00 R 20	16		20.5 R 25 **		28	29.5 R 35 **		40
10.00 R 20	16		505/85 R 25 (183E)			33.25 R 35 **		44
12.00 R 20	18		550/65 R 25 * (1)			37.25 R 35 **		48
E20 (13./80 R 20) (1)			21.00 R 25 **		40	37.5 R 39 **		52
14.00 R 20 (1)			23.5 R 25 *	28		40/65 R 39 *	42	
16.00 R 20			23.5 R 25 **		32	40.5/75 R 39 **		54
525/70 R 20.5			525/80 R 25 (179E)			45/65 R 39 * (1)		
24 R 20.5			600/65 R 25 * (1)			45/65 R 45 *	50	
24 R 21			650/65 R 25 (1)			24.00 R 49 **		48
12.00 R 24 ***	24	24	26.5 R 25 *	32		27.00 R 49 **		54
13.00 R 24 TG *	14		26.5 R 25 **		32	30.00 R 51 **		64
14.00 R 24 TG *	16		750/65 R 25 (1)			33.00 R 51 **		68
14.00 R 24	24		29.5 R 25 *	34		36.00 R 51 **		74
14.00 R 24 ***	28	32	29.5 R 25 **		34	50/65 R 51 ** (1)		
385/95 R 24 (170E, 170F)			850/65 R 25 (1)			37.00 R 57 ** (1)		
15.00 R 24 (17/80 R 24) (1)			26.5 R 29 **		34	40.00 R 57 **		78
16.00 R 24 TG *	16		775/65 R 29 (1)			50/80 R 57 ** (1)		
16.00 R 24 **		36	29.5 R 29 *	34		55/80 R 57 * (1)		
13.00 R 25 ***		28	29.5 R 29 **		40	50/90 R 57 ** (1)		
14.00 R 25 ***		32	33.25 R 29 **		44	60/80 R 57 (1)		
385/95 R 25 (170E, 170F)			800/65 R 29 * (1)			53/80 R 63 ** (1)		
15.5 R 25 *	16		875/65 R 29 (1)			55/80 R 63 ** (1)		
16.00 R 25 **		36	18.00 R 33 **		40	56/80 R 63 ** (1)		
395/80 R 25 (165E)			21.00 R 33 **		32	59/80 R 63 ** (1)		
17.5 R 25 *	16		33.5 R 33 **		44			

(1) no corresponding PR in these sizes which are only made in radial construction.

MICHELIN EARTHMOVER TYRE RANGE

A VARIETY OF TREAD PATTERNS


G2
MICHELIN **XGLA2**


L2
MICHELIN **XTLA**


L2
MICHELIN **XSNOPLUS M+S**


L3
MICHELIN **XHA**


L3
MICHELIN **XHA2**


L3
MICHELIN **XLD**


L3
MICHELIN **XRDN**


L3
MICHELIN **XKA**


L3
MICHELIN **XSMDN+**


L4
MICHELIN **XLDD1**


E4 L4
MICHELIN **XTXL**


E4
MICHELIN **XKD1A**


L5
MICHELIN **XLDD2**


L5
MICHELIN **X MINE D2**


L5
MICHELIN **XSMD2+**


C1
MICHELIN **X LISSE COMPACTEUR**


MICHELIN **XZL**


MICHELIN **XZH**


MICHELIN **XLB**


MICHELIN **XS**


MICHELIN **XSNOPLUS M + S**


MICHELIN **XMH S**


MICHELIN **X-CRANE X-CRANE +**


MICHELIN **XGC**

Consult the Earthmover tyre range brochure for the conditions of use of each tyre by machine type.

MICHELIN **XVC**

E3

MICHELIN **XAD 65-1**

E3

MICHELIN **XADN XADN +**

E4

MICHELIN **X-SUPER TERRAIN X-SUPER TERRAIN +**

E4

MICHELIN **XADT**

E3

MICHELIN **XTS**

E3

MICHELIN **XMS**

E4

MICHELIN **XRS**

E4

MICHELIN **XTXL**

E3

MICHELIN **X-TRACTION S**

E3

MICHELIN **XDR2 S**

E3

MICHELIN **XDR S**

E3

MICHELIN **XDC**

E4

MICHELIN **XHD1**

E4

MICHELIN **X - QUARRY X - QUARRY S**

E4

MICHELIN **X HAUL**

E4

MICHELIN **XDT**

E4

MICHELIN **X-TRACTION**

E4

MICHELIN **XDM**

E4

MICHELIN **XDR**

E4

MICHELIN **XDR250**

E4

MICHELIN **XDR2**

TECHNOLOGY OF MICHELIN RADIAL CASING TYRES

A tyre's construction is the key to its performance, and outstanding tyre performance is a key competitive advantage for transport and working machines in the earthmover industry.

Earthmoving equipment can achieve outstanding performance by using radial tyres.

COMPOSITION

The radial design combines metal or fabric plies, extending from one bead to the other, with a belt made of several steel plies designed to reinforce the crown of the tyre.

A UNIQUE CONSTRUCTION WITH NUMEROUS ADVANTAGES

The sidewalls and crown work independently:

- Minimizing the deformation of the contact patch and the weight of the tyre
- Improving adhesion and traction while slowing down the rate of wear
- Increasing the load capacity as the metal casing can take higher inflation pressures

The flexibility of the sidewalls of a radial tyre therefore provides greater comfort:

- No compromise on stability
- Better resistance to damage and punctures

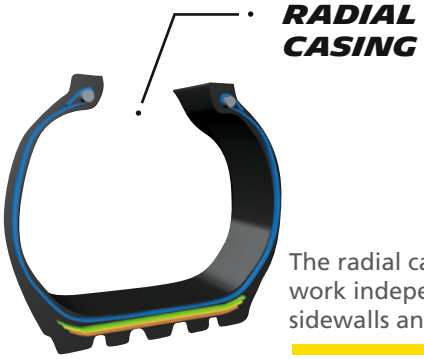

The radial casing permits to work independently of the tyre's sidewalls and crown.

TYRE PERFORMANCE LEVELS THAT TRANSFORM MACHINE PERFORMANCE

Michelin invented the radial design and is an expert in this field.
Radial tyres significantly improve the productivity of earthmover machines.
The radial technology offers the best compromise between the following factors: load, speed, operational efficiency of the machines, tyre service life, operator safety, etc.

Using a radial tyre also improves fuel economy and reduces the environmental footprint.

Two machines are launched at 30 km/h. After disengaging the motor, we measure the distance traveled.
The machine, equipped with Michelin tyres, has less rolling resistance and therefore travel further. This equates to lower fuel consumption in operation.

Image from tests carried out in our research and development in Almeria in Spain.

*Find this test and many other video on the **www.michelinearthmover.com** or from your Michelin account manager.*

COMPARISON BETWEEN BIAS AND RADIAL TYRES

THE MICHELIN® X® RADIAL

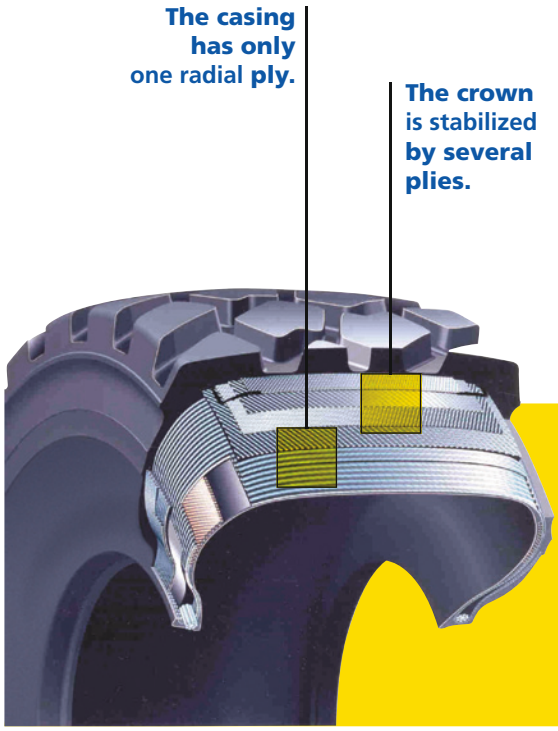

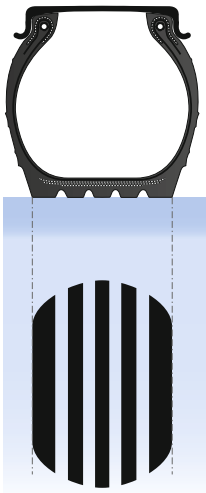

The sidewall and tread function separately.

The tread is unaffected by the flexing of the sidewalls, so there is:

- less deformation of the tyre contact area on the ground
- less movement in tread contact area
- no movement between casing plies

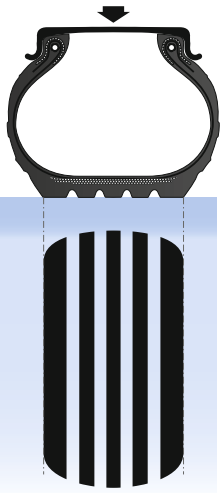

Advantages:

- long tyre life
- outstanding traction on all types of surface
- lower fuel consumption due to lower rolling resistance
- improved comfort
- increased resistance to punctures / flats
- increased resistance to heating
- protect property and persons

BIAS OR CROSS PLY CONSTRUCTION

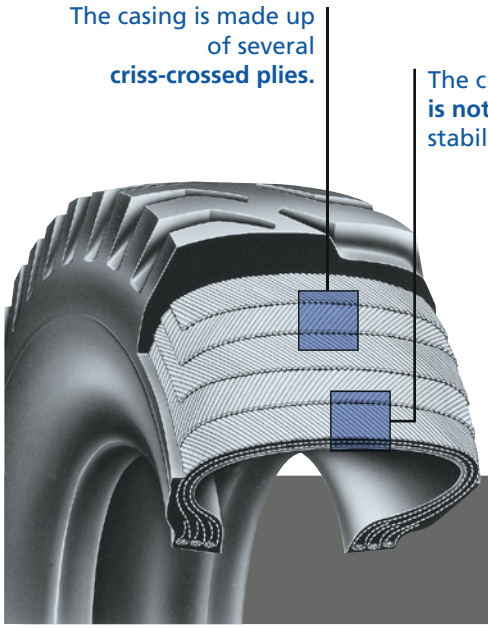

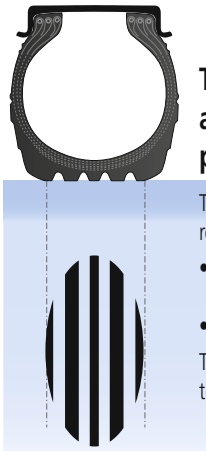

The crown and sidewalls are formed by the same ply structure.

The tread is affected by flexing of the sidewalls, resulting in:

- deformation of the tyre contact area on the ground
- movement in the tread contact area.

The casing plies tend to "scissor" in relation to each other

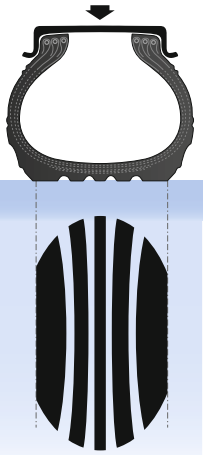

Disadvantages:

- accelerated wear
- less grip
- increased fuel consumption

ADVICE AND RECOMMENDATIONS ON THE USE OF MICHELIN EARTHMOVER TYRES

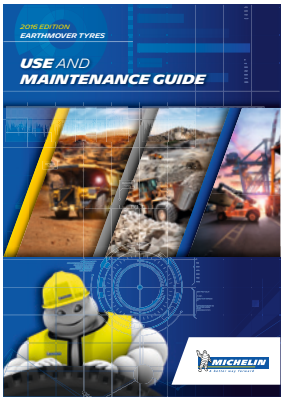

The following information is extracted from the Use and Maintenance Guide of Michelin Earthmover Tyres. For more details, consult our website ***www.michelinearthmover.com*** *or from your Michelin representative.*

The tyre is the only point of contact between the machine and the ground.
Users must ensure that they preserve the life and performance of their tyres. To do so, it is recommended that users adhere to the following safety instructions and usage recommendations. These recommendations are subject to more restrictive local provisions: legal, regulatory requirements, etc.

CHOICE OF TYRE

The choice of a tyre must be compliant with legislation and with equipment recommended by the vehicle or tyre manufacturer or by an official organisation (size, load and speed indices, tyre structures, etc.).
Moreover, it is necessary to take account of the conditions in which the tyre will be used in order to ensure its performance to meet the users expectations. The type of tread pattern depends mainly on conditions of use encountered: adherence, risk of cuts, rapid wear. The optimum performance of equipment depends largely on the choice of tyre.
A tread pattern inappropriate for the work leads to a sharp reduction in the tyres life and may affect vehicle productivity.

In the event of the original vehicle equipment being modified, it is advisable to make sure that the solution offered is compliant with the legislation in force, the machines technical constraints, conditions of use and the manufacturers recommendations, (Please refer to regulations in force in the local country). Therefore, in some countries, a modified machine must receive administrative authorisation.
Before being fitted, any second-hand or used tyre must be subjected to careful inspection by a specialist tyre professional in order to guarantee the safety of the user and compliance with the regulations in force (Vehicle checks and maintenance).

USE OF TYRES

GENERAL RECOMMENDATIONS

Never use the tyre beyond the limits of the technical specifications for which it has been approved on the machines.
Certain excessive or abnormal geometrical settings for the machine may have an effect on the tyre's performance.
Poor use or wrong choice of tyre can also contribute to premature wearing of certain mechanical parts.
According to the obligations of the legislation, or technical or security recommendations, the two tyres on the same axle must be identical.

FITTING OF TG EARTHMOVER TYRES (24 INCH DIAMETER)

TG tyres (XGLA2, XRA, XSNOPLUS) must only be fitted on drop-centre, semi drop-centre or single piece wheels.

Do not fit these tyres on flat base rims which are incompatible because they have differences in seat diameter.

FITTING OF 15.5 R 25* AND 17.5 R 25* EARTHMOVER TYRES

L2 (XTLA*, XSNOPLUS*) and L3 (XHA*) tyres can be fitted to:
- multi piece SDC or Flat Base rims
- single piece rims

NOTE: L3** (XKA), L4 (XLDD1) and L5 (XLD D2,* XMINE D2, XSM D2+) tyres should only be fitted to multi piece rims. They should not be fitted to single piece rims.

DUAL MOUNTING

For technical and safety reasons, you must adhere to the recommendations of the manufacturer of the machine.
We advise against the following mountings:
- dual mounting of Michelin radial tyres with cross ply (bias) tyres
- dual mounting of a tyre of normal tread depth with a deep treaded tyre
- dual mounting of tyres of the same type which have different remaining tread depths (legislation or manufacturers).

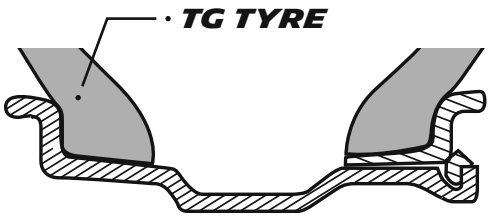

SEMI DROP CENTRE RIM (SDC)

OK ✔

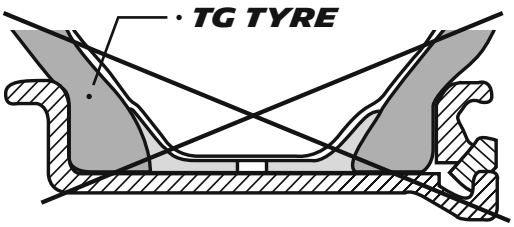

FLAT BASE RIM

NON ✘

FITTING

INTRODUCTION

Correct fitting, performed in accordance with recommended operating procedures and complying with the safety rules in force, ensures excellent protection for people and material, and allows the tyres' full potential to be exploited.
Poor fitting can cause damage to the tyres, the vehicle and / or cause serious injury or even death to personnel.
It is therefore essential that these operations are carried out by people who have been trained and who have the appropriate equipment available, and in accordance with the procedure.
We strongly recommend that tyre fitting is undertaken by a trained tyre professional.
Tube type tyres must be fitted with an appropriate flap and inner tube.
In all cases, it is essential to refer to the technical instructions of the tyre manufacturer, vehicle manufacturer and wheel manufacturer, as well as the user manual for the tyre-fitting machinery or equipment.

GENERAL PRECAUTIONS

Operators must always wear appropriate protection equipment.
Operators must know recommended procedure.
Operators must ensure that the vehicle is stopped, secured and properly stabilized (parking brake engaged, blocks ...), motor turned off.

PRECAUTIONS FOR REMOVAL

a) **when removing the vehicle wheel**
If the tyre is twin-fitted or if the rim shows evidence of damage, **the tyres must be deflated prior** to removal of the whole fitment (remove the valve core). Failure to observe this could lead to accidents very serious consequences.
Ensure that the tyre's temperature allows it to be removed safely. Comply with the manufacturers' recommendations and instructions.

b) **when the tyre is removed on the vehicle**
Completely deflate the tyre before any operation.

PRECAUTIONS FOR INFLATING

- Ensure that the wheel and its components are in good condition
- Verifying the compatibility of the tyre and the wheel (wheel authorized for the tyre) and the pressure capacity of the wheel
- Adhere to the positions, direction of fitting, direction of rotation and any other instructions referred to on the tyre sidewall.
- In the case of tubeless mounting
  - with a rubber valve, this must be systematically replaced
  - with metallic valves, check the air tightness and continue with the replacement of valve cores or seals if necessary.
- After fitting the tyre to the vehicle, a torque wrench must be used to achieve the optimal torque as specified by the machine manufacturer.

PRECAUTIONS FOR INFLATING

Tyre inflation is an essential factor, not only for optimisation of tyre performance but also in terms of SAFETY.
It is necessary for correct machine behavior (road holding and braking) as well as maintaining the tyre's stability.

Only use inflation equipment intended for this purpose and fitted with a pressure limiter.
No person must be in the immediate proximity of the equipment in order to be out of the path of any potential discharge in the event of an incident.

OPERATING PRESSURE

The inflation pressure that must be strictly adhered to is that recommended by the manufacturer.
In the absence of real elements known to determine a pressure (weighing results, driving conditions, etc...), the operating pressure can be given only by the Michelin representative or by a qualified professional who is trained to take into account the use criteria of the tyre (ground conditions, cycle lengths, transported materials, etc.).

Under-inflation or over-inflation can significantly affect tyre performance.
Rolling underinflated causes an abnormal rise in temperature of the components of the tyre and can cause one tyre degradation. This degradation is irreversible and may lead to destruction of tyre with brutal deflation.
The negative effects of insufficient inflated pressure are not necessarily immediate and even may manifest until some time after correction...

STORAGE AND MAINTENANCE

Tyres are rubber-based and are subject to natural ageing. For that storage does not adversely affect the life of the tyre, but it must be under specific conditions, limited in time, and as far as possible inside.

- In premises that are well-ventilated, dry and temperate, protected from direct sunlight and bad weather
- Away from any chemical substances, solvents or hydrocarbons likely to interfere with the nature of the rubber
- Away from any object that could penetrate the rubber (sharp metal, wood, etc.)
- Away from any source of heat, flame, incandescent object, material that could cause sparks or electrical discharges and any ozone sources (transformers, electric motors, soldering devices, etc.).

Poor handling of an unfitted tyre can cause it to be irreparably damaged.
In order to eliminate the risk of bead damage and the problems which could result, we strongly advise that:

1 - The tyre is not lifted directly by the bead with a crane hook.
2 - Flat straps are used (not steel slings or chains).
3 - The tyre is lifted under the tread and not on the beads when a fork lift truck with telescopic forks is used.

Moreover, accessories must be stored in their original packaging, on surfaces that do not present any danger of cutting, tearing or perforation.
In all cases, for the handling of tyres and accessories, operators must

- Be equipped with their protective clothing.
- Observe the safety of the company.
- Use a suitable material to use.
- Use of instruments and equipment that is not harmful to tyres.

For more information, especially for terms and conditions of storage and height stackings of the tyres, see Chapter 3 of the User Guide and Maintenance Tyres.

MACHINE CHECKS AND MAINTENANCE

GENERAL RECOMMENDATIONS

Ensure that the machine is stationary and secured before any inspection.
Tyres must be inspected regularly in order to detect any unusual wear and potential damage.
Wheel torque must be checked in accordance with the machine manufacturer's recommendations.
Any perforations, cuts or visible distortion of the tread, sidewalls or flange area must be the subject of a thorough (internal/external) examination of the tyre by a tyre professional. It is the same for any damage to the rim.
In all circumstances, do not put back into operation any tyres that exhibit damage, such as deformed bead or visible bead wire, separations between components, visible cable cords, damage from petroleum products or corrosive particles, marbling or abrasion of the interior rubber resulting from any running at insufficient pressure.
Each time the machine is inspected, check that the valve cap is in good condition. If in doubt, replace it.

CHECKING FOR WEAR

Checking for wear must always be carried out at several points on the tyre.
This check can be carried out using a tyre depth gauge or by looking for signs of wear on the tread (noted on the sidewall by a symbol when present).
If the legal or technical limit for wear has been reached, the tyre must be removed and replaced.
A tyre professional must be consulted if there is abnormal wear or a difference in wear between two tyres on the same axle.

REPAIR

Not all damage can be repaired.
All repairs must be carried out by a trained and qualified professional.
Repairs are preceded as a matter of course by a detailed inspection of the tyre by the professional. A tyre that has been run underinflated or flat may have suffered irreversible damage and only an exhaustive check of the interior of the tyre will enable a diagnosis of whether or not the tyre can be put back into use.
Removal of the tyre is therefore essential in order to assess with certainty its actual condition and the type of repair required.

PRESSURE

Given that a tyre loses pressure naturally, it is necessary to adjust it periodically.
This check will enable any abnormal loss of pressure to be detected.
This check must be carried out on all the vehicle's tyres.
A tyre operated with insufficient pressure will undergo an abnormal rise in operating temperature, which can lead to irreversible damage of internal components and cause its complete destruction with up to rapid deflation of the tyre.
The consequences of running with insufficient inflation pressure are not necessarily immediate and may appear even after rectification.
An excessive pressure can cause rapid and irregular wear, resulting in increased susceptibility to impacts (tread damage, rupture of the casing, etc.).
It is recommended that tyre pressures are checked when tyres are cold If they are checked after running, the tyres are hot and pressure will not be accurate.

If pressure is checked when hot, the pressure should be readjusted in line with the manufacturer's recommendations (consult your Michelin representative).
Given that pressure increases with temperature, a hot tyre must never be deflated.
Always respect the equality of pressure between dual tyres.
Inflation with nitrogen is not an exemption from the need to check tyre pressure regularly.
In all circumstances, adhere to the pressures recommended by the machine or tyre manufacturers.

PRODUCT LIFE

Tyres are made from different types of materials and rubber-based components, whose properties are essential to the proper running of the tyre itself. These properties evolve over time.
For each tyre, this evolution depends on many factors, such as climate, storage conditions (temperature, humidity, position, etc.), conditions of use (load, speed, inflation pressure, road damage, etc.) to which the tyre is subjected during its working life.

These ageing factors vary so much that it is impossible to predict the life of a tyre with any accuracy. This is why, in addition to regular user checks, it is recommended to have the tyres regularly checked by a qualified professional, who will determine whether the tyre is fit to continue in operation.
This inspection must be carried out at least once a year.
Michelin shall in no way be held responsible for damage that may occur as a result of uses or storage practices contrary to Michelin instructions.

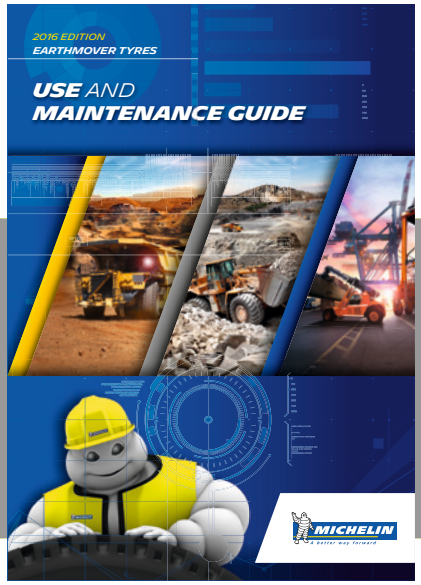

The preceding information is extracted from the USE AND MAINTENANCE GUIDE FOR MICHELIN EARTHMOVER TYRES. For more details, consult our website www.michelinearthmover.com or from your Michelin representative.

EXPLANATION OF THE DIFFERENT MEASUREMENTS

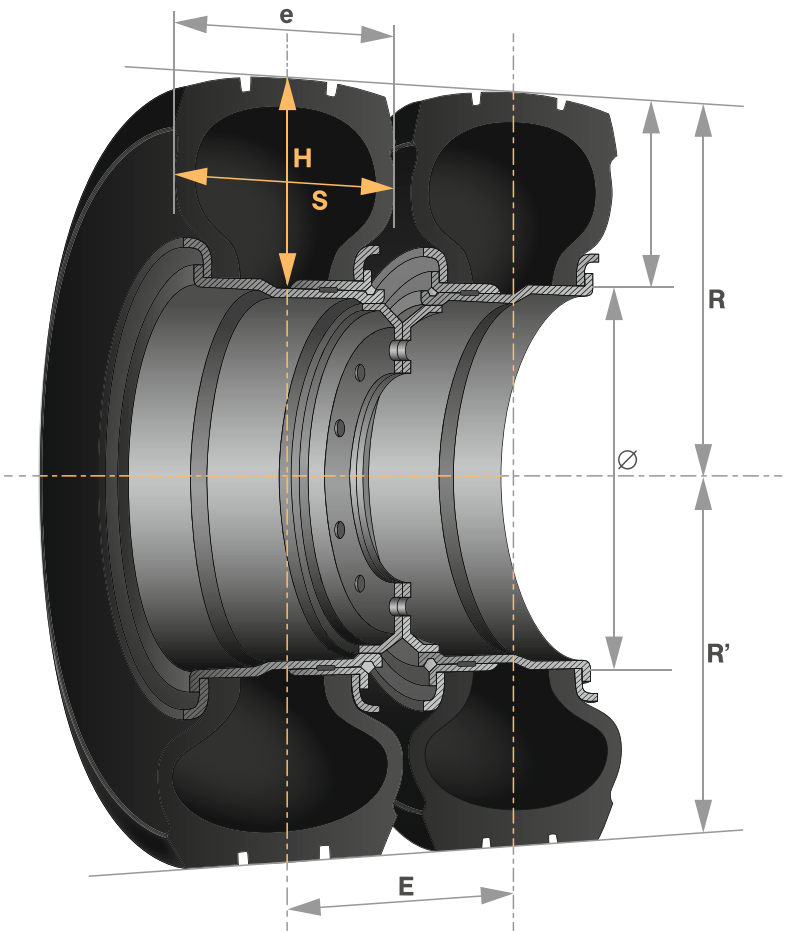

e maximum overall section width section width on measuring rim (this rim is indicated in bold)

D external tyre diameter (R x 2)

Ø nominal bead seat diameter (rim diameter)

S standard section width

E minimum Michelin dual spacing (on measuring rim)

H standard section height

R free radius (2R = D)

R' static loaded radius *

RC rolling circumference *

Tread depth tyre tread depth in mm (rubber depth that can be use without risking damage to plies)

Cap. Interior capacity of the tyre (to calculate the nitogen quantity when inflated with nitrogen, or the liquid quantity when filled). This information is not required when when inflated with air.

** determinated by the reference conditions.*

The dimensional data given in tabular form in this publication (as indicated above) conforms to those of the European Standard (E.T.R.T.O.).
They are given for information only and may change.

NOTES

READING GUIDE FOR LOAD, PRESSURE AND USE TABLES

READING GUIDE FOR PRESSURE, LOAD AND USE TABLES

Remember: the correct pressure of the machine (on a site and for a job) depends on the working conditions and type of use.
In order to obtain optimum performance from tyre, it is advised that:
- the machine is weighed under working loads,
- the maximum distance allowed per hour for the tyre is not exceeded.

The shaded box of pressure, load and use tables is the value defined by the industry standards. Up to this limit, the tyre works in an optimal zone leading to a better balance of performance.
The use of Michelin earthmover tyres outside the specification of pressure, load and use tables must have a prior technical validation given by your Michelin representative.

EXPLANATION OF REFERENCES

(also see cover flap)

1/ see pages ..... **7 and 102** .....explanation about TKPH (TMPH)

2/ see page ..... **21** .....explanation of the different characteristics

3/ .....explanation about rim size marking
example: 44.00/5.0 [6.0]
the 1st value indicates rim width in inch) (in this example: 44 inches)
the 2nd value indicates the height of the rim flange (in this example: 5 inches)
the 3rd value indicates the width of the rim flange (in this example: 6 inches)

4/ see page ..... **84** .....information and explanation about components used with Michelin earthmover tyres

5/ .....increase pressure by 0,5 bar on the loader front axle

6/ see page ..... **16** .....and in the **EARTHMOVER TYRE USE AND MAINTENANCE GUIDE BY MICHELIN**
explanation about TG rim

7/ .....tyre under development or currently subject to an ETRTO experimental standard

8/ .....fabrication is discontinued *(commercial description highlighted to attract attention)*

9/ .....special order only *(commercial description highlighted to attract attention)*
Consult your local Michelin representative

10/ see pages **23 to 25, 96 to 106** ...explanation of the various tables of load according to the use and to the tyre position
and how to determine pressures.
It is imperative to follow the explanation given.
Not following instructions may impact tyre performance.

11/ see page ..... **5** .....standardized usage codes

12/ .....never exceed 6 bar or 87 PSI

13/ .....The removable flange must be continous along its circumference, with no opening.

EXPLANATION OF THE DIFFERENT USES

Important: load/pressure scales are classified according different uses of machines.

LOADERS

Front Laden This table is used in priority. The loads come from the weighing of the loader or the axle weight given by the manufacturer.
This is the pressure, load and use tables, built from the maximum reference point given by the standards.
For front tyres of the loader, it is possible to increase the pressure value given in Table Front Laden up to 1 bar without changing the carrying capacity. The resulting pressure must remain below the maximum values of inflation pressure when the latter are specified (see previous page).

Front Tipping This table is used when the only information available is that of the operating weight and tipping load of the loader (see page 98). This table can not be used to determine the operating pressure of dimensions 35/65 R 33 and beyond.

Rear Unladen This table is used when the weight of the rear axle of the unladen loader is known or when the rear axle weight is given by the manufacturer.

COMPACTOR

10 and 15 km/h These tables are given according to the maximum work speeds of the compactors. In all cases, the indications and the instructions provided by the manufacturer must be applied (Table indicating the pressure according to the work to be carried out).

UNDERGROUND MINING MACHINES

This is the table that is used for tyres fitted to underground transport machines.

GRADERS

All axles This is the table that is used when the axle weight has been determined (by weighing or from the manufacturer's data).
This table is derived from a reference speed of 40 km/h.
For higher speeds, a decline of carrying capacity, as shown in the table below, is applied in accordance with the standards (ex: Year Book TRA 2015, page 4-28).

SPEED OF USE (KM/H)	VARIATION IN LOAD CAPACITY (%)
40	0
50	- 9
60	**- 18**
65	- 27

TRANSPORT (RIGID DUMP TRUCKS, TRUCKS, ...), ARTICULATED DUMP TRUCKS, SCRAPERS

Standard Table loads / pressures built from the reference point "Off-the-road haulage service". This is the table that is used when one has determined the axle load (by weighing or by the manufacturer).

CRANES AND SIMILAR SPECIALIZED MACHINES

Standard

This is the table Load / Speed / Pressure that is used to adjust the pressure at the desired load based on maximum rates of use for the tyres fitted on vehicles (all terrain, mobile cranes, intervention vehicules…). There are two ranges of tyres. Reference speed 70 km/h, Speed symbol E or reference speed 80 km/h, Speed symbol F.

USE IN DESERTS AND SIMILAR CONDITIONS

Depending on whether the vehicle is fitted single or twin, the corresponding load table will be adopted.

1/ Road (Road in single / Road in twin):
These pressures are to be applied when the vehicle runs on good roads (This means asphalt or compacted surfaces). For these conditions the pressures have been calculated for a maximum speed of 80 km/h (50 mph) or 65 km/h (40 mph) depending on the tyre size considered.

2/ Track (Track in single / Track in twin):
These pressures are recommended for driving on roads in poor condition, washboard (corrugated) and gravel or desert surfaces.
For these conditions the pressures have been calculated

- ➔ for a maximum speed of 65 km/h (40 mph).if the speed on road is 80 km/h (50 mph),
- ➔ or a maximum speed of 50 km/h (30 mph).if the speed on road is 65 km/h (40 mph).

3/ Sand (Sand in single / sand in twin):
These pressures are used to allow the vehicle to cross without difficulty the difficult areas where the problem of adhesion or depression can be important. To avoid premature depletion of the kilometric performance, the speed must be limited

- ➔ to 20 km/h (12,5 mph) if the speed on road is 80 km/h (50 mph),
- ➔ to 15 km/h (9.3 mph) if the speed on road is 65 km/h (40 mph).

After “sand” use, the pressure must be readjusted for subsequent conditions of use (road or track).

CHARACTERISTICS OF MICHELIN EARTHMOVER TYRES

COMMERCIAL DESCRIPTION Types CAI (Part Number)	Max. dist./ hour km Miles	TKPH TMPH (1)	DIMENSIONAL CHARACTERISTICS (2) Michelin dimensions e mm inches	D mm inches	R' mm inches	RC mm inches	Tread depth mm 32rd	Entraxe mm inches	Cap. l galon	Measuring Rim Approved Rims (3) - (4)	Tubeless Seal CAI (4)	Tube Type Ref. Flap (4)
15"												
7.50 R 15 Tube Type												
MICHELIN X LISSE COMPACTEUR C1 123461			198 7.8	770 30.3	338 13.3	2324 91.5	9 11.3		40 11	5.5 **6.0** 6.00S 6.5 B6.5		15/16 J 15x6.00 (8)
7.50 R 15 Tube Type												
MICHELIN XMINE D2 L5 123342	6 3.7		230 9.1	840 33.1	385 15.2	2551 100.4	46 58		39 10	5.5 **6.0** 6.00S 6.5 B6.5		15/16 J 15x6.00 (8)
8.25 R 15 Tube Type												
MICHELIN XMINE D2 L5 123352	6 3.7		250 9.8	882 34.7	402 15.8	2680 105.5	48 60.5		47 12	6.0 **6.5** B6.5 7.0		15 K 15x7.50 (8) 15x6.00 (8) 15x6.00
10.00 R 15 Tube Type												
MICHELIN XMINE D2 L5 123372	6 3.7		295 11.6	910 35.8	411 16.2	2748 108.2	48 60.5		70 18	7.0 **7.5**		15 P 15x7.50 (8)
350/65 R 15 (32x14.5 R 15) Tubeless												
MICHELIN XMINE D2 L5 826683	6 3.7		348 13.7	844 33.2	379 14.9	2543 100.1	36 45.4		91 24	10.50 **11.50**		
14.5 R 15 Tubeless												
MICHELIN XMINE D2 L5 123101	6 3.7		380 15	894 35.2	408 16.1	2711 106.7	48 60.5		90 24	**10.50** 11.00BD 11.0 11.50		
400/80 R 15 (38x16 R 15) Tubeless												
MICHELIN XMINE D2 L5 735466	6 3.7		385 15.2	996 39.2	445 17.5	2996 118	34 42.8		128 34	**11.50**		

CHARACTERISTICS OF MICHELIN EARTHMOVER TYRES

Tread type	Identification code (11)	Explanations on how to choose the tyre and to determine the inflation pressures Refer to explanations and methods allowing to determine the inflation pressure (10)

15"

	Machine - Use	bar / psi	3 / 44	3.5 / 51	3.75 / 54	4 / 58	4.5 / 65	5 / 73	5.5 / 80	6 / 87	7 / 102	8 / 116
X LISSE COMPACTEUR C1	Compactors	10 km/h 6 mph	1250 2756	1400 3087	1470 3241	1540 3396	1680 3704	1830 4035	1970 4344	2120 4675	2420 5336	2725 6009
		15 km/h 9 mph	1020 2249	1135 2503	1190 2624	1250 2756	1375 3032	1500 3308	1600 3528	1700 3749	1980 4366	2180 4807

	Machine - Use	bar / psi	3 / 44	3.5 / 51	3.75 / 54	4 / 58	4.5 / 65	5 / 73	5.5 / 80	6 / 87	7 / 102	8 / 116
XMINE D2 L5	Loaders	Front laden	1850 4079	2000 4410	2075 4575	2150 4741	2250 4961	2400 5292	2500 5513	2650 5843	2900 6395	3150 6946
		Rear unladen	1475 3252	1600 3528	1650 3638	1725 3804	1800 3969	1925 4245	2000 4410	2125 4686	2325 5127	2525 5568
XMINE D2 L5	Underground mine machines	Front and Rear	1675 3693	1800 3969	1875 4134	1925 4245	2025 4465	2150 4741	2250 4961	2375 5237	2600 5733	2825 6229

	Machine - Use	bar / psi	3 / 44	3.5 / 51	3.75 / 54	4 / 58	4.5 / 65	5 / 73	5.5 / 80	6 / 87	7 / 102	8 / 116
XMINE D2 L5	Loaders	Front laden	2000 4410	2200 4851	2300 5072	2400 5292	2550 5623	2700 5954	2850 6284	3000 6615	3300 7277	3600 7938
		Rear unladen	1600 3528	1750 3859	1850 4079	1925 4245	2050 4520	2150 4741	2275 5016	2400 5292	2650 5843	2875 6339
XMINE D2 L5	Underground mine machines	Front and Rear	1800 3969	1975 4355	2075 4575	2150 4741	2300 5072	2425 5347	2575 5678	2700 5954	2975 6560	3250 7166

	Machine - Use	bar / psi	3 / 44	3.5 / 51	4 / 58	4.5 / 65	5 / 73	5.5 / 80	6 / 87	6.5 / 94	7 / 102	8 / 116
XMINE D2 L5	Loaders	Front laden	2400 5292	2600 5733	2800 6174	3000 6615	3200 7056	3350 7387	3500 7718	3700 8159	3900 8600	4300 9482
		Rear unladen	1925 4245	2075 4575	2250 4961	2400 5292	2550 5623	2675 5898	2800 6174	2965 6538	3125 6891	3450 7607
XMINE D2 L5	Underground mine machines	Front and Rear	2150 4741	2350 5182	2525 5568	2700 5954	2875 6339	3025 6670	3150 6946	3325 7332	3500 7718	3875 8544

	Machine - Use	bar / psi	3 / 44	3.5 / 51	3.75 / 54	4 / 58	4.5 / 65	5 / 73	5.5 / 80	6 / 87	7 / 102	8 / 116
XMINE D2 L5	Loaders	Front laden	2400 5292	2660 5865	2790 6152	2920 6439	3150 6946	3400 7497	3570 7872	3750 8269	4200 9261	4600 10143
		Rear unladen	1920 4234	2128 4692	2232 4922	2336 5151	2520 5557	2720 5998	2856 6297	3000 6615	3360 7409	3680 8114
XMINE D2 L5	Underground mine machines	Front and Rear	2160 4763	2394 5279	2511 5537	2628 5795	2835 6251	3060 6747	3213 7085	3375 7442	3780 8335	4140 9129

	Machine - Use	bar / psi	3 / 44	3.5 / 51	3.75 / 54	4 / 58	4.5 / 65	5 / 73	5.5 / 80	6 / 87	7 / 102	8 / 116
XMINE D2 L5	Loaders	Front laden	2550 5623	2850 6284	2975 6560	3100 6836	3350 7387	3600 7938	3850 8489	4100 9041	4600 10143	5100 11246
		Rear unladen	2050 4520	2275 5016	2375 5237	2475 5457	2675 5898	2875 6339	3075 6780	3275 7221	3675 8103	4075 8985
XMINE D2 L5	Underground mine machines	Front and Rear	2300 5072	2575 5678	2675 5898	2800 6174	3025 6670	3250 7166	3475 7662	3700 8159	4150 9151	4600 10143

	Machine - Use	bar / psi	3 / 44	3.5 / 51	3.75 / 54	4 / 58	4.5 / 65	5 / 73	5.5 / 80	6 / 87	7 / 102	8 / 116
XMINE D2 L5	Loaders	Front laden	3300 7277	3650 8048	3825 8434	4000 8820	4350 9592	4700 10364	5050 11135	5400 11907	6100 13451	6600 14553
		Rear unladen	2650 5843	2925 6450	3050 6725	3200 7056	3475 7662	3750 8269	4050 8930	4325 9537	4875 10749	5275 11631
XMINE D2 L5	Underground mine machines	Front and Rear	2975 6560	3275 7221	3450 7607	3600 7938	3900 8600	4225 9316	4550 10033	4850 10694	5500 12128	5950 13120

CHARACTERISTICS OF MICHELIN EARTHMOVER TYRES

COMMERCIAL DESCRIPTION Types CAI (Part Number)	Max. dist./ hour km Miles	TKPH TMPH (1)	DIMENSIONAL CHARACTERISTICS (2) Michelin dimensions e mm inches	D mm inches	R' mm inches	RC mm inches	Tread depth mm 32rd	Entraxe mm inches	Cap. l galon	Measuring Rim Approved Rims (3) - (4)	Tubeless Seal CAI (4)	Tube Type Ref. Flap (4)
20"												
9.00 R 20 Tube Type												
MICHELIN XMINE D2 L5R * 123382	6 3.7		277 10.9	1054 41.5	484 19.1	3203 126.1	51 64.3		98 26	6.5 - B6.5 7.0T 7.0 B 7.0 7.33V B7.5 7.5	A20 553004	20 M 20x7.50 E 20x7.50 (8)
12.00 R 20 Tube Type												
MICHELIN XMINE D2 L5R 123392	6 3.7		323 12.7	1174 46.2	534 21	3555 140	57 71.8		146 39	8.0 **8.5** B 8.5 8.5V 8.50V 9.0 9.00V	A20 553004	20 Q 20x8.50 (8) 20x8.50 E
E20 PIL X L C 13/80 R 20 Tube Type												
MICHELIN X LISSE COMPACTEUR C1 240750			322 12.7	1050 41.3	470 18.5	3160 124.4	12 15.1		140 37	7.33V - 7.5 B 7.5 - 8.0 B8.0 - 8.0V 8.00V - 8.5 B B8.5 - 8.50V 9.00V - 10.0 - 10.00V **9.0**	A20 553004	20 P 20x8.50 (8) 20x8.50 E
14.00 R 20 Tubeless												
MICHELIN XMINE D2 L5R 372138	6 3.7		368 14.5	1236 48.7	557 21.9	3745 147.4	48 60.5		175 46	**10.00** 10.00W	A20 553004	20 Q 20x10.00 (8) 20x10.00 E
16.00R20 Tubeless												
MICHELIN XZL E2 173G 123357	70 43.5		438 17.2	1343 52.9	615 24.2	4080 160.6	27 34		315 83	**10.00W** 11.25	A20 553004	20 V 20x10.00 (8) 20x10.00 E

CHARACTERISTICS OF MICHELIN EARTHMOVER TYRES

Tread type	Identification code (11)	Explanations on how to choose the tyre and to determine the inflation pressures Refer to explanations and methods allowing to determine the inflation pressure (10)

20"

	Machine - Use	bar / psi	3 / 44	4 / 58	5 / 73	6 / 87	7 / 102	8 / 116				
XMINE D2 * L5R	Loaders	Front tip.load	5100 / 11246	5800 / 12789	6450 / 14222	7150 / 15766	7800 / 17199	8500 / 18743				
		Front laden	3000 / 6615	3400 / 7497	3800 / 8379	4200 / 9261	4600 / 10143	5000 / 11025				
		Rear unladen	2400 / 5292	2700 / 5954	3050 / 6725	3350 / 7387	3700 / 8159	4000 / 8820				
XMINE D2 * L5R	Underground mine machines	Front and Rear	2700 / 5954	3050 / 6725	3400 / 7497	3800 / 8379	4150 / 9151	4500 / 9923				

	Machine - Use	bar / psi	3 / 44	4 / 58	5 / 73	6 / 87	7 / 102	8 / 116				
XMINE D2 L5R	Loaders	Front tip.load	5800 / 12789	6800 / 14994	7800 / 17199	8850 / 19514	9850 / 21719	10900 / 24035				
		Front laden	3400 / 7497	4000 / 8820	4600 / 10143	5200 / 11466	5800 / 12789	6400 / 14112				
		Rear unladen	2700 / 5954	3200 / 7056	3700 / 8159	4150 / 9151	4650 / 10253	5100 / 11246				
XMINE D2 L5R	Underground mine machines	Front and Rear	3050 / 6725	3600 / 7938	4150 / 9151	4700 / 10364	5200 / 11466	5750 / 12679				

	Machine - Use	bar / psi	3 / 44	4 / 58	5 / 73	6 / 87	7 / 102	8 / 116	8.5 / 123	9 / 131		
X LISSE COMPACTEUR C1	Compactors	10 km/h 6 mph	2520 / 5557	3100 / 6836	3660 / 8070	4260 / 9393	4840 / 10672	5420 / 11951	5710 / 12591	6000 / 13230		
		15 km/h 9 mph	2240 / 4939	2760 / 6086	3260 / 7188	3790 / 8357	4310 / 9504	4820 / 10628	5000 / 11025			

	Machine - Use	bar / psi	3 / 44	4 / 58	5 / 73	5.5 / 80	6 / 87	6.5 / 94	7 / 102	8 / 116	8.5 / 123	
XMINE D2 L5R	Loaders	Front laden	4140 / 9129	4920 / 10849	5690 / 12546	6070 / 13384	6460 / 14244	6850 / 15104	7230 / 15942	8010 / 17662		
		Rear unladen	2430 / 5358	3100 / 6836	3770 / 8313	4100 / 9041	4430 / 9768	4770 / 10518	5100 / 11246	5770 / 12723		
XMINE D2 L5R	Underground mine machines	Front and Rear	3480 / 7673	4200 / 9261	4920 / 10849	5280 / 11642	5640 / 12436	6000 / 13230	6360 / 14024	7070 / 15589	7793 / 17184	

	Machine - Use	bar / psi	2 / 29	3 / 44	4 / 58	5 / 73	6 / 87	7 / 102	8 / 116	8.5 / 123	9 / 131	10 / 145
XZL E2	Cranes and Similar Specialized Machines	0 km/h 0 mph	3580 / 7894	4830 / 10650	6125 / 13506	7390 / 16295	8660 / 19095	9900 / 21830	11200 / 24696	12075 / 26625	12950 / 28555	14700 / 32414
		5 km/h 3 mph	2850 / 6284	3950 / 8710	5000 / 11025	6100 / 13451	7200 / 15876	8100 / 17861	9250 / 20396	9825 / 21664	10400 / 22932	11550 / 25468
		10 km/h 6 mph	2750 / 6064	3750 / 8269	4750 / 10474	5750 / 12679	6700 / 14774	7600 / 16758	8700 / 19184	9125 / 20121	9550 / 21058	10600 / 23373
		20 km/h 12 mph	2500 / 5513	3250 / 7166	4250 / 9371	5000 / 11025	6000 / 13230	6860 / 15126	7600 / 16758	8075 / 17805	8550 / 18853	9500 / 20948
		30 km/h 19 mph	2250 / 4961	3000 / 6615	3750 / 8269	4500 / 9923	5250 / 11576	6000 / 13230	6860 / 15126	7225 / 15931	7590 / 16736	
		40 km/h 25 mph	2000 / 4410	2750 / 6064	3550 / 7828	4250 / 9371	5000 / 11025	5750 / 12679	6500 / 14333	6830 / 15060	7160 / 15788	
		50 km/h 31 mph	1950 / 4300	2700 / 5954	3500 / 7718	4200 / 9261	4900 / 10805	5700 / 12569	6350 / 14002	6725 / 14829	7100 / 15656	
		65 km/h 40 mph	1850 / 4079	2650 / 5843	3400 / 7497	4150 / 9151	4850 / 10694	5550 / 12238	6300 / 13892	6650 / 14663	7000 / 15435	
		80 km/h 50 mph	1800 / 3969	2600 / 5733	3350 / 7387	4100 / 9041	4800 / 10584	5500 / 12128	6250 / 13781	6550 / 14443	6850 / 15104	
		90 km/h 56 mph	1750 / 3859	2550 / 5623	3300 / 7277	4050 / 8930	4750 / 10474	5450 / 12017	6200 / 13671	6500 / 14333		

CHARACTERISTICS OF MICHELIN EARTHMOVER TYRES

COMMERCIAL DESCRIPTION Types CAI (Part Number)	Max. dist./ hour km Miles	TKPH TMPH (1)	DIMENSIONAL CHARACTERISTICS (2) Michelin dimensions e mm inches	D mm inches	R' mm inches	RC mm inches	Tread depth mm 32rd	Entraxe mm inches	Cap. l galon	Measuring Rim Approved Rims (3) - (4)	Tubeless Seal CAI (4)	Tube Type Ref. Flap (4)
20"												
450/70 R 20 Tubeless												
MICHELIN XMINE D2 L5 ** 976013	8 5		433 17	1163 45.8	515 20.3	3488 137.3	37 46.6		229 61	15.00T		
20.5"												
525/65 R 20.5 Tubeless												
MICHELIN XS E7 173F 109421 (9)			521 20.5	1200 47.2	548 21.6	3640 143.3	17 21.4		337 89	16.00		19.5/20.5 UD
24 R 20.5 Tubeless												
MICHELIN XS E7 176F 109174 (9)			602 23.7	1374 54.1	620 24.4	4150 163.4	17 21.4		538 142	18.00		20.5 WAMD
21"												
24 R 21 Tubeless												
MICHELIN XZL E2 176G 110257 (9)			608 23.9	1388 54.6	631 24.8	4200 165.4				18.00/1.5	OR 6.6-21 553213	21 WAM 17-20
24"												
12.00 R 24 Tube Type												
MICHELIN XZH E3 *** 123369	35 21.7	119 82	321 12.6	1258 49.5	591 23.3	3857 151.9	30 37.8		171 45	7.33V 8.0 8.00V 8.50V 8.5		24 Q 24/25x8.50 E
12.00 R 24 Tube Type												
MICHELIN XK A L3 *** 242110	14 8.7		330 13	1244 49	569 22.4	3775 148.6	21 26.5		155 41	7.33V 7.5 8.0 8.00V 8.50V 8.5	G25 (R1237) 553012	24 Q 24/25x8.50 E
MICHELIN XMINE D2 L5R 242046	6 3.7			1280 50.4	594 23.4	3906 153.8	57 71.8		138 36			
MICHELIN XSM D2+ L5S 123647	4 2.5		325 12.8	1264 49.8	580 22.8	3840 151.2			140 37			

CHARACTERISTICS OF MICHELIN EARTHMOVER TYRES

Tread type	Identification code (11)	Explanations on how to choose the tyre and to determine the inflation pressures Refer to explanations and methods allowing to determine the inflation pressure (10)

20"

	Machine - Use	bar / psi	5 / 73	5.5 / 80	6 / 87	6.5 / 94	7 / 102	7.25 / 105	7.5 / 109	7.75 / 112	8 / 116	8.25 / 120
XMINE D2 ** L5	Loaders	Front laden	6700 14774	7100 15656	7750 17089	8000 17640	8500 18743	8750 19294	9000 19845	9250 20396	9500 20948	9750 21499
		Rear unladen	5360 11819	5680 12524	6200 13671	6400 14112	6800 14994	7000 15435	7200 15876	7400 16317	7600 16758	7800 17199
XMINE D2 ** L5	Underground Tansport Machine	Front and Rear	6000 13230	6500 14333	6900 15215	7300 16097	7750 17089	8000 17640	8250 18191	8500 18743	8550 18853	8750 19294

20.5"

	Machine - Use	bar / psi	1 / 15	2 / 29	3 / 44	4 / 58	5 / 73	6 / 87	7 / 102	8 / 116		
XS E7	Desert conditions 80 km/h max.	Road in single	1450 3197	2150 4741	2850 6284	3600 7938	4300 9482	5000 11025	5750 12679	6500 14333		
		Track in single	1700 3749	2600 5733	3500 7718	4450 9812	5250 11576					
		Sand in single	2300 5072	3850 8489	5250 11576							

	Machine - Use	bar / psi	1 / 15	2 / 29	2.5 / 36	3 / 44	3.5 / 51	4 / 58	4.5 / 65	5 / 73	5.5 / 80	6 / 87
XS E7	Desert conditions 80 km/h max.	Road in single	1950 4300	2950 6505	3450 7607	4000 8820	4500 9923	5010 11047	5520 12172	6050 13340	6575 14498	7100 15656
		Track in single	2550 5623	3650 8048	4250 9371	4750 10474	5300 11687	5850 12899	6400 14112	6750 14884	7100 15656	
		Sand in single	3500 7718	5350 11797	6400 14112	7100 15656						

21"

	Machine - Use	bar / psi	1 / 15	2 / 29	2.5 / 36	3 / 44	3.5 / 51	4 / 58	4.5 / 65	5 / 73	5.5 / 80	6 / 87
XZL E2	Desert conditions 80 km/h max.	Road in single	1950 4300	2950 6505	3450 7607	4000 8820	4500 9923	5010 11047	5520 12172	6050 13340	6575 14498	7100 15656
		Track in single	2550 5623	3650 8048	4250 9371	4750 10474	5300 11687	5850 12899	6400 14112	6750 14884	7100 15656	
		Sand in single	3500 7718	5350 11797	6400 14112							

24"

	Machine - Use	bar / psi	4 / 58	4.5 / 65	5 / 73	5.5 / 80	6 / 87	6.5 / 94	7 / 102	8 / 116	8.5 / 123	
XZH * E3**	Transport	Standard	2700 5954	2950 6505	3200 7056	3475 7662	3750 8269	4000 8820	4250 9371	4500 9923	4650 10253	

	Machine - Use	bar / psi	2 / 29	2.5 / 36	3 / 44	3.5 / 51	4 / 58	4.5 / 65	5 / 73	5.5 / 80	6 / 87	7 / 102
XMINE D2 L5R **XSM D2+ L5S**	Loaders	Front tip.load	3900 8600	4600 10143	5200 11466	5850 12899	6550 14443	7150 15766	7800 17199	8450 18632	9100 20066	10350 22822
		Front laden	2300 5072	2700 5954	3050 6725	3450 7607	3850 8489	4200 9261	4600 10143	4975 10970	5350 11797	6100 13451
		Rear unladen	1850 4079	2150 4741	2450 5402	2750 6064	3100 6836	3350 7387	3700 8159	4000 8820	4300 9482	4900 10805
XK A * L3** **XSM D2+ L5S** **XMINE D2 L5R**	Underground mine machines	Front and Rear	2050 4520	2450 5402	2750 6064	3100 6836	3450 7607	3800 8379	4150 9151	4475 9867	4800 10584	5500 12128

CHARACTERISTICS OF MICHELIN EARTHMOVER TYRES

COMMERCIAL DESCRIPTION Types CAI (Part Number)	Max. dist./ hour km Miles	TKPH TMPH (1)	DIMENSIONAL CHARACTERISTICS (2) Michelin dimensions e mm inches	D mm inches	R' mm inches	RC mm inches	Tread depth mm 32rd	Entraxe mm inches	Cap. l galon	Measuring Rim Approved Rims (3) - (4)	Tubeless Seal CAI (4)	Tube Type Ref. Flap (4)
24"												
13.00 R 24 Tubeless												
MICHELIN XGL A2 L2 * TG 123386 (6, 10)	16 9.9		335 13.2	1296 51	570 22.4	3875 152.6	25 31.5		215 57	**8.00 TG SDC** 9.00/1.5 DC 10.00 VA SDC	OR 2-25 HEUPO 553201	KLEBER 703 13-24 DR
14.00 R 24 Tube Type												
MICHELIN XK A E3 *** 251590	14 8.7		401 15.8	1380 54.3	638 25.1	4205 165.6	24 30.2		270 71	9.00V 9.0 **10.0/2.0** 10.00W		24/25 T 13-24/25 (8)
MICHELIN XK D1 A E4 *** 251592	18 11.2	84 58	401 15.8	1412 55.6	657 25.9	4313 169.8	37 46.6		270 71			
14.00 R 24 Tube Type												
MICHELIN XK A E3 *** 251590	14 8.7		401 15.8	1380 54.3	638 25.1	4205 165.6	24 30.2		270 71	9.00V 9.0 10.0/2.0 **10.00W**		24/25 TAM 24/25 T 13-24/25 (8) 13-24/25 S (8)
MICHELIN XK D1 A E4 *** 251592	18 11.2	84 58		1412 55.6	657 25.9	4313 169.8	37 46.6					
MICHELIN XSM D2+ L5S 123597	4 2.5			1395 54.9	636 25	4227 166.4	58 73.1		266 70			
14.00 R 24 TG Tubeless												
MICHELIN XSNOPLUS L2 * TG 123861 (6)	16 9.9		372 14.6	1364 53.7	545 21.5	3941 155.2	24 30.2		264 70	**8.00 TG SDC** 9.00/1.5 DC 10.00VA SDC	OR 2-25 HEUPO 553201	24 ST 24 TD 13-24 DR
MICHELIN XGL A2 L2 * TG 123395 (6)			371 14.6	1360 53.5	592 23.3	4051 159.5	25 31.5		310 82			
15.00 R 24 Pil (17/80 R 24) Tube Type												
MICHELIN X LISSE COMPACTEUR C1 252211			415 16.3	1334 52.5	592 23.3	4002 157.6	21 26.5		320 85	9.00V 9.0 **10.0** 10.0W		24/25 TAM 24/25 T 13-24/25 (8) 13-24/25 S (8)
16.00 R 24 Tubeless												
MICHELIN XGL A2 L2 * TG 123903 (6)	16 9.9		435 17.1	1500 59.1	646 25.4	4451 175.2	27 34		412 109	**10.00 VA SDC**	OR 2-25 HEUPO 553201	24/25 VD 13-24 DR

CHARACTERISTICS OF MICHELIN EARTHMOVER TYRES

Tread type	Identification code (11)	Explanations on how to choose the tyre and to determine the inflation pressures Refer to explanations and methods allowing to determine the inflation pressure (10)

24"

Tread type	Machine - Use	bar / psi	2 / 29	2.5 / 36	3 / 44	3.5 / 51	4 / 58	4.5 / 65	5 / 73			
XGL A2 * TG L2	Loaders	Front tip.load	4500 9923	5250 11576	6100 13451	6900 15215	7650 16868	8400 18522	9200 20286			
		Front laden	2650 5843	3100 6836	3600 7938	4050 8930	4500 9923	4950 10915	5400 11907			
		Rear unladen	2100 4631	2500 5513	2900 6395	3250 7166	3600 7938	3950 8710	4300 9482			
XGL A2 * TG L2	Graders	Front and Rear	1900 4190	2225 4906	2550 5623	2900 6395						

Tread type	Machine - Use	bar / psi	4 / 58	5 / 73	5.5 / 80	6 / 87	6.5 / 94	7 / 102	8 / 116			
XK A *** E3 XK D1 A *** E4	Transport	Standard	3750 8269	4500 9923	4850 10694	5600 12348	5700 12569	5800 12789	6150 13561			

Tread type	Machine - Use	bar / psi	2 / 29	2.5 / 36	3 / 44	3.5 / 51	4 / 58	4.5 / 65	5 / 73	5.5 / 80	6 / 87	7 / 102
XSM D2+ L5S	Loaders	Front tip.load	5550 12238	6400 14112	7300 16097	8150 17971	9100 20066	10050 22160	10900 24035	11750 25909		
		Front laden	3250 7166	3750 8269	4300 9482	4800 10584	5350 11797	5900 13010	6400 14112	6900 15215		
		Rear unladen	2600 5733	3000 6615	3450 7607	3850 8489	4300 9482	4700 10364	5100 11246	5500 12128		
XK A *** E3 XK D1 A *** E4 XSM D2+ L5S	Underground mine machines	Front and Rear	2950 6505	3400 7497	3850 8489	4300 9482	4800 10584	5300 11687	5750 12679	6200 13671	6550 14443	7250 15986

Tread type	Machine - Use	bar / psi	2 / 29	2.5 / 36	3 / 44	3.5 / 51	4 / 58	4.5 / 65	5 / 73	5.5 / 80		
XSNOPLUS * TG L2 XGL A2 * TG L2	Loaders	Front tip.load	5550 12238	6400 14112	7300 16097	8150 17971	9100 20066	10050 22160	10900 24035	11750 25909		
		Front laden	3250 7166	3750 8269	4300 9482	4800 10584	5350 11797	5900 13010	6400 14112	6900 15215		
		Rear unladen	2600 5733	3000 6615	3450 7607	3850 8489	4300 9482	4700 10364	5100 11246	5500 12128		
XSNOPLUS * TG L2 XGL A2 * TG L2	Graders	Front and Rear	2300 5072	2725 6009	3125 6891	3550 7828						

Tread type	Machine - Use	bar / psi	3 / 44	4 / 58	5 / 73	6 / 87	6.5 / 94	7 / 102	7.5 / 109	8 / 116	8.5 / 123	
X LISSE COMPACTEUR C1	Compactors	10 km/h 6 mph	5320 11731	6540 14421	7750 17089	8965 19768	9570 21102	10180 22447	10790 23792	11390 25115	12000 26460	
		15 km/h 9 mph	4740 10452	5820 12833	6900 15215	7980 17596	8520 18787					

Tread type	Machine - Use	bar / psi	2 / 29	2.5 / 36	3 / 44	3.5 / 51	4 / 58	4.5 / 65	5 / 73			
XGL A2 * TG L2	Loaders	Front tip.load	7650 16868	8750 19294	9850 21719	10900 24035	12000 26460	13100 28886	14200 31311			
		Front laden	4500 9923	5150 11356	5800 12789	6400 14112	7050 15545	7700 16979	8350 18412			
		Rear unladen	3600 7938	4100 9041	4650 10253	5100 11246	5650 12458	6150 13561	6700 14774			
XGL A2 * TG L2	Graders	Front and Rear	3150 6946	3625 7993	4125 9096	4625 10198						

CHARACTERISTICS OF MICHELIN EARTHMOVER TYRES

COMMERCIAL DESCRIPTION Types CAI (Part Number)	Max. dist./ hour km Miles	TKPH TMPH (1)	DIMENSIONAL CHARACTERISTICS (2) Michelin dimensions e mm inches	D mm inches	R' mm inches	RC mm inches	Tread depth mm 32rd	Entraxe mm inches	Cap. l galon	Measuring Rim Approved Rims (3) - (4)	Tubeless Seal CAI (4)	Tube Type Ref. Flap (4)
24"												
385/95 R 24 Tube Type												
MICHELIN XSNOPLUS 170E 432272	70 43.5		386 15.2	1358 53.5	635 25	4156 163.6	24 30.2		283 75	9.00V 9.0 10.0/2.0 **10.00W**		24/25 TAM 24/25 T 13-24/25 (8) 13-24/25 S (8)
MICHELIN XMH S E2T 170E 957157			389 15.3	1361 53.6	632 24.9	4155 163.6			284 75			
385/95 R 24 Tube Type												
MICHELIN X-CRANE 170F 778245	80 49.7		376 14.8	1361 53.6	631 24.8	4153 163.5	23 29		284 75	**10.00W** 10.0 11.25/1.3		24/25 T 13-24/25 (8)
25"												
14.00 R 25 Tubeless												
MICHELIN XH D1 A E4 *** 123331	22 13.7	102 70	401 15.8	1410 55.5	650 25.6	4291 168.9	38 47.9		275 73	**10.00/1.5** 11.25/1.3	OR 2-25 HEUPO 553201	24/25 TAM 24/25 T 13-24/25 (8) 13-24/25 S (8)

CHARACTERISTICS OF MICHELIN EARTHMOVER TYRES

Tread type	Identification code (11)	Explanations on how to choose the tyre and to determine the inflation pressures Refer to explanations and methods allowing to determine the inflation pressure (10)

24"

	Machine - Use	bar / psi	5 / 73	6 / 87	7 / 102	8 / 116	9 / 131					
XSNOPLUS XMH S E2T	Cranes and Similar Specialized Machines	30 km/h 19 mph	4860 10716	5880 12965	6460 14244	7000 15435	7800 17199					
		40 km/h 25 mph	4635 10220	5610 12370	6165 13594	6675 14718	7450 16427					
		50 km/h 31 mph	4410 9724	5340 11775	5865 12932	6355 14013	7100 15656					
		60 km/h 37 mph	4190 9239	5070 11179	5565 12271	6030 13296	6720 14818					
		65 km/h 40 mph	4020 8864	4865 10727	5345 11786	5790 12767	6450 14222					
		70 km/h 43 mph	3740 8247	4525 9978	4970 10959	5385 11874	6000 13230					
		80 km/h 50 mph	3086 6805	3735 8236	4100 9041	4445 9801	4950 10915					
		90 km/h 56 mph	2620 5777	3170 6990	3480 7673	3770 8313	4200 9261					
		100 km/h 62 mph	2245 4950	2715 5987	2980 6571	3230 7122	3600 7938					

	Machine - Use	bar / psi	5 / 73	6 / 87	7 / 102	8 / 116	9 / 131					
X-CRANE	Cranes and Similar Specialized Machines	30 km/h 19 mph	4750 10474	5440 11995	6125 13506	6815 15027	7500 16538					
		40 km/h 25 mph	4370 9636	5005 11036	5635 12425	6270 13825	6900 15215					
		50 km/h 31 mph	4255 9382	4870 10738	5490 12105	6105 13462	6720 14818					
		60 km/h 37 mph	4180 9217	4785 10551	5390 11885	5995 13219	6600 14553					
		65 km/h 40 mph	4085 9007	4675 10308	5270 11620	5860 12921	6450 14222					
		70 km/h 43 mph	3990 8798	4570 10077	5145 11345	5725 12624	6300 13892					
		80 km/h 50 mph	3800 8379	4350 9592	4900 10805	5450 12017	6000 13230					
		90 km/h 56 mph	3570 7872	4090 9018	4605 10154	5120 11290	5640 12436					
		100 km/h 62 mph	3230 7122	3700 8159	4165 9184	4630 10209	5100 11246					

25"

	Machine - Use	bar / psi	4 / 58	4.5 / 65	5 / 73	5.5 / 80	5.75 / 83	6 / 87	7 / 102	8.5 / 123		
XH D1 A *** E4	Transport	Standard	3750 8269	4100 9041	4500 9923	4850 10694	5100 11246	5250 11576	5800 12789	6350 14002		

CHARACTERISTICS OF MICHELIN EARTHMOVER TYRES

COMMERCIAL DESCRIPTION Types CAI (Part Number)	Max. dist./ hour km Miles	TKPH TMPH (1)	DIMENSIONAL CHARACTERISTICS (2) Michelin dimensions e mm inches	D mm inches	R' mm inches	RC mm inches	Tread depth mm 32rd	Entraxe mm inches	Cap. l galon	Measuring Rim Approved Rims (3) - (4)	Tubeless Seal CAI (4)	Tube Type Ref. Flap (4)
25"												
385/95 R 25 Tubeless												
MICHELIN XSNOPLUS E2 170E 705961	70 43.5		388 15.3	1365 53.7	632 24.9	4163 163.9	25 31.5		280 74	10.00/1.5 11.25/1.3	OR 2-25 HEUPO 553201	24/25 TAM 24/25 T 13-24/25 (8) 13-24/25 S (8)
MICHELIN XMH S 170E 254174			391 15.4	1361 53.6		4155 163.6	24 30.2		278 73			
385/95 R 25 Tubeless												
MICHELIN X-CRANE + 170F 682834	80 49.7		380 15	1365 53.7	633 24.9	4165 164	23 29		280 74	9.50/1.7 CR 10.00/1.5 11.25/1.3	OR 3-25 SULLA 553200 OR 2-25 HEUPO 553201	24/25 TAM 24/25 T 13-24/25 (8) 13-24/25 S (8)
MICHELIN X-CRANE 170F 296917 (8)												
15.5 R 25 Tubeless												
MICHELIN XTL A L2 * 123415 (5)	16 9.9		397 15.6	1272 50.1	556 21.9	3795 149.4	26 32.8		245 65	12.00/1.3 12.00/1.3DC 13.00/1.4DC	OR 2-25 HEUPO 553201	25 SAM 15-24/25 (8)
MICHELIN XH A L3 * 123008			404 15.9	1270 50	555 21.9	3789 149.2						
MICHELIN XMINE D2 L5R * 252905	6 3.7		418 16.5	1336 52.6	609 24	4049 159.4	60 75.6		215 57			
16.00 R 25 Tubeless												
MICHELIN XH D1 A E4 ** 123350	28 17.4	164 112	462 18.2	1540 60.6	704 27.7	4672 183.9	43 54.2	564 22.2	380 100	11.25/2.0 13.00/2.0	OR 3-25 SULLA 553200	24/25 VAM 14-24/25 (8)
MICHELIN X-QUARRY E4R ** 692021	16 9.9	93 64	437 17.2	1542 60.7	707 27.8	4683 184.4	48 60.5	564 22.2	380 100			

CHARACTERISTICS OF MICHELIN EARTHMOVER TYRES

Tread type	Identification code (11)	Explanations on how to choose the tyre and to determine the inflation pressures Refer to explanations and methods allowing to determine the inflation pressure (10)

25"

	Machine - Use	bar / psi	5 / 73	6 / 87	7 / 102	8 / 116	9 / 131					
XSNOPLUS E2 XMH S	Cranes and Similar Specialized Machines	30 km/h 19 mph	4860 10716	5880 12965	6460 14244	7000 15435	7800 17199					
		40 km/h 25 mph	4635 10220	5610 12370	6165 13594	6675 14718	7450 16427					
		50 km/h 31 mph	4410 9724	5340 11775	5865 12932	6355 14013	7100 15656					
		60 km/h 37 mph	4190 9239	5070 11179	5565 12271	6030 13296	6720 14818					
		65 km/h 40 mph	4020 8864	4865 10727	5345 11786	5790 12767	6450 14222					
		70 km/h 43 mph	3740 8247	4525 9978	4970 10959	5385 11874	6000 13230					
		80 km/h 50 mph	3086 6805	3735 8236	4100 9041	4445 9801	4950 10915					
		90 km/h 56 mph	2620 5777	3170 6990	3480 7673	3770 8313	4200 9261					
		100 km/h 62 mph	2245 4950	2715 5987	2980 6571	3230 7122	3600 7938					

	Machine - Use	bar / psi	5 / 73	6 / 87	7 / 102	8 / 116	9 / 131					
X-CRANE + X-CRANE	Cranes and Similar Specialized Machines	30 km/h 19 mph	4750 10474	5440 11995	6125 13506	6815 15027	7500 16538					
		40 km/h 25 mph	4370 9636	5005 11036	5635 12425	6270 13825	6900 15215					
		50 km/h 31 mph	4255 9382	4870 10738	5490 12105	6105 13462	6720 14818					
		60 km/h 37 mph	4180 9217	4785 10551	5390 11885	5995 13219	6600 14553					
		65 km/h 40 mph	4085 9007	4575 10088	5270 11620	5860 12921	6450 14222					
		70 km/h 43 mph	3990 8798	4570 10077	5145 11345	5725 12624	6300 13892					
		80 km/h 50 mph	3800 8379	4350 9592	4900 10805	5450 12017	6000 13230					
		90 km/h 56 mph	3570 7872	4090 9018	4605 10154	5120 11290	5640 12436					
		100 km/h 62 mph	3230 7122	3700 8159	4165 9184	4630 10209	5100 11246					

	Machine - Use	bar / psi	2 / 29	2.5 / 36	3 / 44	3.5 / 51	4 / 58	4.5 / 65				
XTL A * L2 XH A * L3 XMINE D2 * L5R	Loaders	Front tip.load	5900 13010	6800 14994	7700 16979	8550 18853	9300 20507	10300 22712				
		Front laden	3700 8159	4250 9371	4800 10584	5350 11797	5800 12789	6450 14222				
		Rear unladen	2950 6505	3400 7497	3850 8489	4300 9482	4650 10253	5150 11356				
XTL A * L2 XH A * L3 XMINE D2 * L5R	Graders	Front and Rear	2325 5127	2650 5843	3000 6615							
XMINE D2 * L5R	Underground mine machines	Front and Rear	3350 7387	3850 8489	4300 9482	4800 10584	5200 11466	5800 12789				

	Machine - Use	bar / psi	3.5 / 51	4 / 58	4.5 / 65	5 / 73	5.5 / 80	6 / 87	6.5 / 94	7 / 102	7.5 / 109	8 / 116
XH D1 A ** E4	Transport	Standard		5000 11025	5450 12017	5900 13010	6400 14112	6850 15104	7300 16097	7550 16648	7750 17089	8000 17640
X-QUARRY ** E4R	Quarry transport	30 km/h 19 mph	5300 11687	5800 12789	6300 13892	6800 14994	7300 16097	7800 17199				

CHARACTERISTICS OF MICHELIN EARTHMOVER TYRES

COMMERCIAL DESCRIPTION Types CAI (Part Number)	Max. dist./ hour km Miles	TKPH TMPH (1)	DIMENSIONAL CHARACTERISTICS (2) Michelin dimensions e mm inches	D mm inches	R' mm inches	RC mm inches	Tread depth mm 32rd	Entraxe mm inches	Cap. l galon	Measuring Rim Approved Rims (3) - (4)	Tubeless Seal CAI (4)	Tube Type Ref. Flap (4)
25"												
16.00 R 25 Tubeless												
MICHELIN XMINE D2 L5R 261025	6 3.7		457 18	1530 60.2	699 27.5	4641 182.7	73 92		320 85	11.25/2.0 13.00/2.0	OR 3-25 SULLA 553200	24/25 VAM 14-24/25 (8)
445/80 R 25 Tubeless												
MICHELIN XGC 170E 264520	70 43.5		446 17.6	1352 53.2	625 24.6	4119 162.2	28 35.3		340 90	14.00/1.7 CR 14.00/1.5	OR 3-25 SULLA 553200 OR 2-25 HEUPO 553201	24/25 TAM 16-24/25 (8)
445/80 R 25 Tubeless												
MICHELIN XL B 170E 757059	70 43.5		435 17.1	1356 53.4	619 24.4	4112 161.9	26 32.8		340 90	14.00/1.5 14.00/1.7 CR	OR 3-25 SULLA 553200 OR 2-25 HEUPO 553201	24/25 TAM 16-24/25 (8)

CHARACTERISTICS OF MICHELIN EARTHMOVER TYRES

Tread type	Identification code (11)	Explanations on how to choose the tyre and to determine the inflation pressures Refer to explanations and methods allowing to determine the inflation pressure (10)

25"

	Machine - Use	bar / psi	2 / 29	3 / 44	4 / 58	5 / 73	6 / 87	7 / 102				
XMINE D2 L5R	Loaders	Front tip.load	7650 / 16868	9850 / 21719	12000 / 26460	14200 / 31311	16300 / 35942	18550 / 40903				
		Front laden	4500 / 9923	5800 / 12789	7050 / 15545	8350 / 18412	9600 / 21168	10900 / 24035				
		Rear unladen	3600 / 7938	4650 / 10253	5650 / 12458	6700 / 14774	7700 / 16979	8700 / 19184				
XMINE D2 L5R	Underground mine machines	Front and Rear	4050 / 8930	5200 / 11466	6350 / 14002	7500 / 16538	8650 / 19073	9800 / 21609				

	Machine - Use	bar / psi	5 / 73	6 / 87	7 / 102							
XGC	Cranes and Similar Specialized Machines	30 km/h 19 mph	5650 / 12458	6750 / 14884	7800 / 17199							
		40 km/h 25 mph	5400 / 11907	6450 / 14222	7450 / 16427							
		50 km/h 31 mph	5150 / 11356	6150 / 13561	7100 / 15656							
		60 km/h 37 mph	5565 / 12271	6030 / 13296	6720 / 14818							
		65 km/h 40 mph	4650 / 10253	5550 / 12238	6450 / 14222							
		70 km/h 43 mph	4350 / 9592	5200 / 11466	6000 / 13230							
		80 km/h 50 mph	3600 / 7938	4250 / 9371	4950 / 10915							
		90 km/h 56 mph	3050 / 6725	3650 / 8048	4200 / 9261							
		100 km/h 62 mph	2650 / 5843	3150 / 6946	3600 / 7938							

	Machine - Use	bar / psi	2 / 29	3 / 44	4 / 58	5 / 73	6 / 87	7 / 102				
XL B	Cranes and Similar Specialized Machines	30 km/h 19 mph	2725 / 6009	3650 / 8048	4600 / 10143	5650 / 12458	6750 / 14884	7800 / 17199				
		40 km/h 25 mph	2600 / 5733	3475 / 7662	4400 / 9702	5400 / 11907	6450 / 14222	7450 / 16427				
		50 km/h 31 mph	2475 / 5457	3300 / 7277	4150 / 9151	5150 / 11356	6150 / 13561	7100 / 15656				
		60 km/h 37 mph	2365 / 5215	3150 / 6946	3975 / 8765	5565 / 12271	6030 / 13296	6720 / 14818				
		65 km/h 40 mph	2250 / 4961	3000 / 6615	3800 / 8379	4650 / 10253	5550 / 12238	6450 / 14222				
		70 km/h 43 mph	2100 / 4631	2800 / 6174	3550 / 7828	4350 / 9592	5200 / 11466	6000 / 13230				
		80 km/h 50 mph	1725 / 3804	2300 / 5072	2900 / 6395	3600 / 7938	4250 / 9371	4950 / 10915				
		90 km/h 56 mph	1475 / 3252	1975 / 4355	2500 / 5513	3050 / 6725	3650 / 8048	4200 / 9261				
		100 km/h 62 mph	1250 / 2756	1675 / 3693	2150 / 4741	2650 / 5843	3150 / 6946	3600 / 7938				

CHARACTERISTICS OF MICHELIN EARTHMOVER TYRES

COMMERCIAL DESCRIPTION Types CAI (Part Number)	Max. dist./ hour km Miles	TKPH TMPH (1)	DIMENSIONAL CHARACTERISTICS (2) Michelin dimensions e mm inches	D mm inches	R' mm inches	RC mm inches	Tread depth mm 32rd	Entraxe mm inches	Cap. l galon	Measuring Rim Approved Rims (3) - (4)	Tubeless Seal CAI (4)	Tube Type Ref. Flap (4)
25"												
445/95 R 25 Tubeless												
MICHELIN XSNOPLUS E2 177E 123857	70 43.5		447 17.6	1486 58.5	687 27	4528 178.3	25 31.5	513 20.2	380 100	11.00/1.7 CR 11.25/2	OR 3-25 SULLA 553200	24/25 VAM 14-24/25 (8)
445/95 R 25 Tubeless												
MICHELIN X-CRANE + 174F 738428	80 49.7		442 17.4	1485 58.5	693 27.3	4542 178.8	25 31.5		380 100	11.00/1.7 CR 11.25/2 DC 635x280 CR	OR 3-25 SULLA 553200	24/25 VAM 14-24/25 (8)
445/95 R 25 Tubeless												
MICHELIN XL B 177E 282741	70 43.5		422 16.6	1484 58.4	680 26.8	4506 177.4	29 36.5		350 92	11.00/1.7 CR 11.25/2	OR 3-25 SULLA 553200	24/25 VAM 14-24/25 (8)

CHARACTERISTICS OF MICHELIN EARTHMOVER TYRES

Tread type	Identification code (11)	Explanations on how to choose the tyre and to determine the inflation pressures Refer to explanations and methods allowing to determine the inflation pressure (10)

25"

	Machine - Use	bar / psi	5 / 73	6 / 87	7 / 102	8 / 116	9 / 131					
XSNOPLUS E2	Cranes and Similar Specialized Machines	30 km/h 19 mph	5850 / 12899	6750 / 14884	7650 / 16868	8600 / 18963	9500 / 20948					
		40 km/h 25 mph	5600 / 12348	6450 / 14222	7300 / 16097	8200 / 18081	9050 / 19955					
		50 km/h 31 mph	5300 / 11687	6150 / 13561	6950 / 15325	7800 / 17199	8600 / 18963					
		65 km/h 40 mph	4850 / 10694	5600 / 12348	6350 / 14002	7150 / 15766	7800 / 17199					
		70 km/h 43 mph	4500 / 9923	5200 / 11466	5900 / 13010	6600 / 14553	7300 / 16097					
		80 km/h 50 mph	3700 / 8159	4250 / 9371	4850 / 10694	5400 / 11907	6000 / 13230					
		90 km/h 56 mph	3150 / 6946	3650 / 8048	4150 / 9151	4600 / 10143	5100 / 11246					
		100 km/h 62 mph	2700 / 5954	3120 / 6880	3550 / 7828	3950 / 8710	4400 / 9702					

	Machine - Use	bar / psi	5 / 73	6 / 87	7 / 102	8 / 116	9 / 131					
X-CRANE +	Cranes and Similar Specialized Machines	30 km/h 19 mph	5340 / 11775	6095 / 13439	6850 / 15104	7615 / 16791	8375 / 18467					
		40 km/h 25 mph	4910 / 10827	5605 / 12359	6300 / 13892	7005 / 15446	7705 / 16990					
		50 km/h 31 mph	4780 / 10540	5460 / 12039	6140 / 13539	6820 / 15038	7505 / 16549					
		65 km/h 40 mph	4590 / 10121	5240 / 11554	5890 / 12987	6545 / 14432	7205 / 15887					
		70 km/h 43 mph	4485 / 9889	5120 / 11290	5755 / 12690	6395 / 14101	7035 / 15512					
		80 km/h 50 mph	4270 / 9415	4875 / 10749	5480 / 12083	6090 / 13428	6700 / 14774					
		90 km/h 56 mph	4015 / 8853	4580 / 10099	5150 / 11356	5725 / 12624	6300 / 13892					
		100 km/h 62 mph	3775 / 8324	4305 / 9493	4840 / 10672	5380 / 11863	5920 / 13054					

	Machine - Use	bar / psi	2 / 29	3 / 44	4 / 58	5 / 73	6 / 87	7 / 102	8 / 116	9 / 131		
XL B	Cranes and Similar Specialized Machines	30 km/h 19 mph	2925 / 6450	4100 / 9041	5000 / 11025	5850 / 12899	6750 / 14884	7650 / 16868	8600 / 18963	9500 / 20948		
		40 km/h 25 mph	2800 / 6174	3900 / 8600	4775 / 10529	5600 / 12348	6450 / 14222	7300 / 16097	8200 / 18081	9050 / 19955		
		50 km/h 31 mph	2650 / 5843	3725 / 8214	4550 / 10033	5300 / 11687	6150 / 13561	6950 / 15325	7800 / 17199	8600 / 18963		
		65 km/h 40 mph	2400 / 5292	3375 / 7442	4125 / 9096	4850 / 10694	5600 / 12348	6350 / 14002	7150 / 15766	7800 / 17199		
		70 km/h 43 mph	2250 / 4961	3150 / 6946	3850 / 8489	4500 / 9923	5200 / 11466	5900 / 13010	6600 / 14553	7300 / 16097		
		80 km/h 50 mph	1850 / 4079	2600 / 5733	3150 / 6946	3700 / 8159	4250 / 9371	4850 / 10694	5400 / 11907	6000 / 13230		
		90 km/h 56 mph	1575 / 3473	2200 / 4851	2700 / 5954	3150 / 6946	3650 / 8048	4150 / 9151	4600 / 10143	5100 / 11246		
		100 km/h 62 mph	1350 / 2977	1900 / 4190	2300 / 5072	2700 / 5954	3120 / 6880	3550 / 7828	3950 / 8710	4400 / 9702		

CHARACTERISTICS OF MICHELIN EARTHMOVER TYRES

COMMERCIAL DESCRIPTION Types CAI (Part Number)	Max. dist./ hour km Miles	TKPH TMPH (1)	DIMENSIONAL CHARACTERISTICS (2) Michelin dimensions e mm inches	D mm inches	R' mm inches	RC mm inches	Tread depth mm 32rd	Entraxe mm inches	Cap. l galon	Measuring Rim Approved Rims (3) - (4)	Tubeless Seal CAI (4)	Tube Type Ref. Flap (4)
25"												
17.5 R 25 Tubeless												
MICHELIN XSNOPLUS L2T * TG 123871			448 17.6	1342 52.8	580 22.8	3987 157	28 35.3		333 88	14.00/1.3DC 14.00/1.5	OR 2-25 HEUPO 553201	24/25 TAM 16-24/25 (8)
MICHELIN XTL A L2 * 123425 (5)	16 9.9		459 18.1	1337 52.6	574 22.6	3964 156.1			332 88			
MICHELIN XH A L3 * 123009			448 17.6	1340 52.8	608 23.9	4054 159.6	29 36.5		328 87			
MICHELIN XK A L3 ** 263251	14 8.7		481 18.9	1346 53	600 23.6	4045 159.3	25 31.5		300 79			
MICHELIN XLD D2 A L5T * 123317	10 6.2		454 17.9	1406 55.4	619 24.4	4206 165.6	63 79.4		305 81			
MICHELIN XMINE D2 L5 ** 009071	6 3.7		480 18.9	1402 55.2	641 25.2	4254 167.5	65 81.9		285 75			
MICHELIN XSM D2+ L5S ** 218365	4 2.5		456 18	1397 55		4246 167.2	78 98.3		272 72			
MICHELIN XSM D2+ L5S 123707 (8)				1395 54.9	598 23.5	4131 162.6						
18.00 R 25 Tubeless												
MICHELIN XS E7 276450 (9)			492 19.4	1600 63	722 28.4	4831 190.2	21 26.5	641 25.2	532 141	13.00/2.5 15.00/2.5	OR 3-25 SULLA 553200	25 WAM 16-24/25 (8)
18.00 R 25 Tubeless												
MICHELIN XH D1 A E4 ** 123031	22 13.7	163 112	525 20.7	1665 65.6	760 29.9	5050 198.8	47 59.2	598 23.5	500 132	13.00/2.5 15.00/2.5	OR 3-25 SULLA 553200	25 WAM 16-24/25 (8)
MICHELIN XH D1 B E4 ** 123021	30 18.6	222 152	525 20.7	1665 65.6	760 29.9	5050 198.8	47 59.2	598 23.5	500 132			
MICHELIN XK D1 A E4 ** 270680	18 11.2	133 91	530 20.9	1668 65.7	764 30.1	5064 199.4	47 59.2	598 23.5	495 131			

CHARACTERISTICS OF MICHELIN EARTHMOVER TYRES

Tread type	Identification code (11)	Explanations on how to choose the tyre and to determine the inflation pressures Refer to explanations and methods allowing to determine the inflation pressure (10)

25"

Tread type	Machine - Use		bar / psi	2 / 29	2.5 / 36	3 / 44	3.5 / 51	4.25 / 62	4.5 / 65	5 / 73	5.5 / 80	6 / 87	6.5 / 94
XSNOPLUS * TG L2T XTL A * L2 XH A * L3 XLD D2 A * L5T XSM D2+ L5S	Loader	Front tip.load		7300 16097	8150 17971	9100 20066	10000 22050	11350 25027	11750 25909				
		Front laden		4550 10033	5100 11246	5700 12569	6250 13781	7100 15656	7350 16207				
		Rear unladen		3650 8048	4100 9041	4550 10033	5000 11025	5700 12569	5900 13010				
XK A ** L3	Loader	Front tip.load		7300 16097	8150 17971	9100 20066	10000 22050	11350 25027	11750 25909	12700 28004	13600 29988		
		Front laden		4550 10033	5100 11246	5700 12569	6250 13781	7100 15656	7350 16207	7925 17475	8500 18743		
		Rear unladen		3650 8048	4100 9041	4550 10033	5000 11025	5700 12569	5900 13010	6350 14002	6800 14994		
XMINE D2 ** L5 XSM D2+ ** L5S	Loader	Front tip.load				7540 16626	8650 19073	10000 22050	10400 22932	11360 25049	12000 26460	12800 28224	13600 29988
		Front laden				4750 10474	5450 12017	6250 13781	6500 14333	7100 15656	7500 16538	8000 17640	8500 18743
		Rear unladen				3800 8379	4360 9614	5000 11025	5200 11466	5680 12524	6000 13230	6400 14112	6800 14994
XSNOPLUS * TG L2T XTL A * L2 XH A * L3 XLD D2 A * L5T	Graders	Front and Rear		2800 6174	3250 7166	3650 8048							
XK A ** L3 XLD D2 A * L5T	Underground Tansport Machine	Front and Rear				4250 9371	4750 10474	5600 12348	5800 12789	6300 13892	6700 14774		
XMINE D2 ** L5	Underground Tansport Machine	Front and Rear				4250 9371	4750 10474	5600 12348	5800 12789	6300 13892	6700 14774	7100 15656	7500 16538

Tread type	Machine - Use		bar / psi	1 / 15	1.5 / 22	2 / 29	2.5 / 36	3 / 44	3.5 / 51	4 / 58	4.5 / 65	5 / 73	6 / 87
XS E7	Desert conditions 65 km/h max.	Road in single				3250 7166	3900 8600	4500 9923	5050 11135	5600 12348	6250 13781	6850 15104	8000 17640
		Road in twin				2925 6450	3510 7740	4050 8930	4545 10022	5040 11113	5625 12403	6165 13594	7200 15876
		Track in single				3250 7166	4050 8930	4950 10915	5750 12679	6600 14553			
		Track in twin				2925 6450	3645 8037	4455 9823	5175 11411	5940 13098			
		Sand in single		3600 7938	5050 11135	6350 14002							
		Sand in twin		3240 7144	4545 10022	5715 12602							

Tread type	Machine - Use		bar / psi	4 / 58	4.25 / 62	4.5 / 65	5 / 73	6 / 87	7 / 102	7.5 / 109			
XH D1 A ** E4 XH D1 B ** E4 XK D1 A ** E4	Transport	Standard		6800 14994	7100 15656	7400 16317	8000 17640	9250 20396	9850 21719	10150 22381			

CHARACTERISTICS OF MICHELIN EARTHMOVER TYRES

COMMERCIAL DESCRIPTION Types CAI (Part Number)	Max. dist./ hour km Miles	TKPH TMPH (1)	DIMENSIONAL CHARACTERISTICS (2) Michelin dimensions e mm inches	D mm inches	R' mm inches	RC mm inches	Tread depth mm 32rd	Entraxe mm inches	Cap. l galon	Measuring Rim Approved Rims (3) - (4)	Tubeless Seal CAI (4)	Tube Type Ref. Flap (4)
25"												
18.00 R 25 Tubeless												
MICHELIN XMINE D2 L5 ** 391927	6 3.7		536 21.1	1656 65.2	736 29	4971 195.7	82 103.3		460 122	**13.00/2.5** 15.00/2.5	OR 3-25 SULLA 553200	25 WAM 16-24/25 (8)
MICHELIN XSM D2+ L5S ** 686348	4 2.5		507 20	1655 65.2	743 29.3	4988 196.4	96 120.9		440 116			
MICHELIN XSM D2+ L5S 123657 (8)			504 19.8	1653 65.1	738 29.1	4969 195.6			432 114			
18.00 R 25 Tubeless												
MICHELIN XV C E2 186E 123491 (8, 9)	50 31.1	284 195	496 19.5	1622 63.9	743 29.3	4925 193.9	26 32.8	641 25.2	563 149	**13.00/2.5** 15.00/2.5	OR 3-25 SULLA 553200	25 WAM 16-24/25 (8)
505/95 R 25 Tubeless												
MICHELIN XVC 183E 565628 (9)	50 31.1	284 195	498 19.6	1610 63.4	743 29.3	4902 193	26 32.8		576 152	10.0/2.0 **13.00/2.5** 15.00/2.5	OR 3-25 SULLA 553200	25 WAM 16-24/25 (8)

CHARACTERISTICS OF MICHELIN EARTHMOVER TYRES

Tread type	Identification code (11)	Explanations on how to choose the tyre and to determine the inflation pressures Refer to explanations and methods allowing to determine the inflation pressure (10)

25"

	Machine - Use	bar / psi	3 / 44	4 / 58	4.5 / 65	5 / 73	5.5 / 80	6 / 87	7 / 102	7.5 / 109	8 / 116	8.25 / 120
XSM D2+ L5S	Loader	Front tip.load	13700 30209	16900 37265	18450 40682	20050 44210	21500 47408	22950 50605	25750 56779			
		Front laden	8050 17750	9950 21940	10850 23924	11800 26019	12650 27893	13500 29768	15150 33406			
		Rear unladen	6450 14222	7950 17530	8700 19184	9450 20837	10100 22271	10800 23814	12100 26681			
XMINE D2 ** L5 **XSM D2+ ** L5S**	Loader	Front tip.load		15725 34674	17000 37485	18530 40859	20060 44232	21250 46856	23800 52479	25500 56228	26450 58322	27200 59976
		Front laden		9250 20396	10000 22050	10900 24035	11800 26019	12500 27563	14000 30870	15000 33075	15550 34288	16000 35280
		Rear unladen		7400 16317	8000 17640	8720 19228	9450 20837	10000 22050	11200 24696	12000 26460	12450 27452	12800 28224
XMINE D2 ** L5	Underground Tansport Machine	Front and Rear	6700 14774	8250 18191	9000 19845	9750 21499	10600 23373	11200 24696	12500 27563	13200 29106	14000 30870	14200 31311

	Machine - Use	bar / psi	2 / 29	3 / 44	4 / 58	5 / 73	6 / 87	7 / 102	7.5 / 109	8 / 116	9 / 131	
XV C E2	Cranes and Similar Specialized Machines	30 km/h 19 mph	3700 8159	5200 11466	6300 13892	7400 16317	8650 19073	9900 21830	10500 23153	11100 24476	12400 27342	
		40 km/h 25 mph	3525 7773	4950 10915	6000 13230	7050 15545	8250 18191	9400 20727	10000 22050	10600 23373	11800 26019	
		50 km/h 31 mph	3375 7442	4725 10419	5700 12569	6750 14884	7850 17309	8950 19735	9525 21003	10100 22271	11200 24696	
		65 km/h 40 mph	3050 6725	4275 9426	5200 11466	6100 13451	7100 15656	8150 17971	8650 19073	9150 20176	10200 22491	
		70 km/h 43 mph	2850 6284	4000 8820	4850 10694	5700 12569	6650 14663	7600 16758	8075 17805	8550 18853	9500 20948	
		80 km/h 50 mph	2325 5127	3275 7221	3975 8765	4675 10308	5450 12017	6250 13781	6625 14608	7000 15435	7800 17199	
		90 km/h 56 mph	2000 4410	2800 6174	3400 7497	4000 8820	4650 10253	5300 11687	5650 12458	6000 13230	6650 14663	
		100 km/h 62 mph	1700 3749	2400 5292	2900 6395	3400 7497	4000 8820	4550 10033	4750 10474	5150 11356	5700 12569	

	Machine - Use	bar / psi	5 / 73	6 / 87	7 / 102	8 / 116	9 / 131					
XVC	Cranes and Similar Specialized Machines	30 km/h 19 mph	6435 14189	7670 16912	8905 19636	10140 22359	11375 25082					
		40 km/h 25 mph	6140 13539	7315 16130	8495 18731	9670 21322	10850 23924					
		50 km/h 31 mph	5840 12877	6960 15347	8085 17827	9205 20297	10325 22767					
		60 km/h 37 mph	5545 12227	6610 14575	7670 16912	8730 19250	9800 21609					
		65 km/h 40 mph	5245 11565	6255 13792	7260 16008	8270 18235	9275 20451					
		70 km/h 43 mph	4950 10915	5900 13010	6850 15104	7800 17199	8750 19294					
		80 km/h 50 mph	4060 8952	4840 10672	5615 12381	6390 14090	7175 15821					
		90 km/h 56 mph	3465 7640	4130 9107	4795 10573	5460 12039	6125 13506					
		100 km/h 62 mph	2970 6549	3540 7806	4110 9063	4680 10319	5250 11576					

CHARACTERISTICS OF MICHELIN EARTHMOVER TYRES

COMMERCIAL DESCRIPTION Types CAI (Part Number)	Max. dist./ hour km Miles	TKPH TMPH (1)	DIMENSIONAL CHARACTERISTICS (2) Michelin dimensions e mm inches	D mm inches	R' mm inches	RC mm inches	Tread depth mm 32rd	Entraxe mm inches	Cap. l galon	Measuring Rim Approved Rims (3) - (4)	Tubeless Seal CAI (4)	Tube Type Ref. Flap (4)
25"												
20.5 R 25 Tubeless												
MICHELIN XADN E3T ** 177B 123407	28 17.4	164 112	528 20.8	1490 58.7	667 26.3	4485 176.6	36 45.4		474 125	17.00/2.0	OR 3-25 SULLA 553200	24/25 VAM 17-24/25 (8)
MICHELIN XADT E4T ** 177B 123335	22 13.7	128 88	527 20.7	1492 58.7		4489 176.7	44 55.4		455 120			
20.5 R 25 Tubeless												
MICHELIN XSNOPLUS L2T * 123795	16 9.9		534 21	1471 57.9	632 24.9	4362 171.7	31 39.1		500 132	17.00/2.0 17.00/1.7	OR 3-25 SULLA 553200 OR 2-25 HEUPO 553201	24/25 VAM 17-24/25 (8)
MICHELIN XTL A L2 * 123435 (5)			532 20.9	1480 58.3	637 25.1	4391 172.9						
MICHELIN XHA2 L3 * 186A2 899613			528 20.8	1486 58.5	644 25.4	4420 174	33 41.6		489 129			
MICHELIN XK A L3 ** 263460	14 8.7		560 22		655 25.8	4447 175.1	28 35.3		485 128			
MICHELIN XLD D2 A L5T * 123325	10 6.2		534 21	1530 60.2	674 26.5	4578 180.2	72 90.7		427 113			
MICHELIN XMINE D2 L5 ** 353968	6 3.7		562 22.1	1535 60.4	701 27.6	4656 183.3	74 93.2		447 118			
525/80 R 25 Tubeless												
MICHELIN X-CRANE + 176F 086926	80 49.7		528 20.8	1482 58.3	682 26.9	4508 177.5	28 35.3		500 132	17.00/2.0 17.00/1.7 CR	OR 3-25 SULLA 553200	24/25 VAM 17-24/25 (8)

CHARACTERISTICS OF MICHELIN EARTHMOVER TYRES

Tread type	Identification code (11)	Explanations on how to choose the tyre and to determine the inflation pressures Refer to explanations and methods allowing to determine the inflation pressure (10)

25"

	Machine - Use	bar / psi	2 / 29	2.5 / 36	3 / 44	3.5 / 51	4 / 58	4.25 / 62	4.5 / 65			
XADN ** E3T **XADT ** E4T**	Articulated dumpers	Standard	4750 10474	5250 11576	5750 12679	6250 13781	6800 14994	7050 15545	7300 16097			

	Machine - Use	bar / psi	2 / 29	2.5 / 36	3 / 44	3.5 / 51	4.25 / 62	4.5 / 65	5 / 73	5.5 / 80	6 / 87	6.5 / 94
XSNOPLUS * L2T **XTL A * L2** **XHA2 * L3** **XLD D2 A * L5T**	Loader	Front tip.load	10000 22050	11150 24586	12300 27122	13450 29657	15200 33516	15850 34949				
		Front laden	6250 13781	7000 15435	7700 16979	8400 18522	9500 20948	9900 21830				
		Rear unladen	5000 11025	5600 12348	6150 13561	6700 14774	7600 16758	7900 17420				
XK A ** L3	Loader	Front tip.load	10000 22050	11150 24586	12300 27122	13450 29657	15200 33516	15850 34949	17130 37772	18400 40572		
		Front laden	6250 13781	7000 15435	7700 16979	8400 18522	9500 20948	9900 21830	10700 23594	11500 25358		
		Rear unladen	5000 11025	5600 12348	6150 13561	6700 14774	7600 16758	7900 17420	8550 18853	9180 20242		
XMINE D2 ** L5	Loader	Front tip.load			10080 22226	11360 25049	13440 29635	14000 30870	15200 33516	16000 35280	17440 38455	18400 40572
		Front laden			6300 13892	7100 15656	8400 18522	8750 19294	9500 20948	10000 22050	10900 24035	11500 25358
		Rear unladen			5040 11113	5680 12524	6700 14774	7000 15435	7600 16758	8000 17640	8720 19228	9200 20286
XSNOPLUS * L2T **XTL A * L2** **XHA2 * L3** **XLD D2 A * L5T**	Graders	Front and Rear	3600 7938	4125 9096	4625 10198							
XK A ** L3 **XLD D2 A * L5T**	Underground Tansport Machine	Front and Rear			5600 12348	6300 13892	7300 16097	7750 17089	8250 18191	9000 19845		
XMINE D2 ** L5	Underground Tansport Machine	Front and Rear			5600 12348	6300 13892	7300 16097	7750 17089	8250 18191	9000 19845	9500 20948	10000 22050

	Machine - Use	bar / psi	5 / 73	6 / 87	7 / 102							
X-CRANE +	Cranes and Similar Specialized Machines	30 km/h 19 mph	6700 14774	7700 16979	8900 19625							
		40 km/h 25 mph	6150 13561	7100 15656	8200 18081							
		50 km/h 31 mph	6000 13230	6900 15215	8000 17640							
		60 km/h 37 mph	5900 13010	6800 14994	7850 17309							
		65 km/h 40 mph	5750 12679	6650 14663	7650 16868							
		70 km/h 43 mph	5650 12458	6500 14333	7500 16538							
		80 km/h 50 mph	5350 11797	6150 13561	7100 15656							
		90 km/h 56 mph	5050 11135	5800 12789	6700 14774							
		100 km/h 62 mph	4550 10033	5250 11576	6050 13340							

CHARACTERISTICS OF MICHELIN EARTHMOVER TYRES

COMMERCIAL DESCRIPTION Types CAI (Part Number)	Max. dist./ hour km Miles	TKPH TMPH (1)	DIMENSIONAL CHARACTERISTICS (2) Michelin dimensions e mm inches	D mm inches	R' mm inches	RC mm inches	Tread depth mm 32rd	Entraxe mm inches	Cap. l galon	Measuring Rim Approved Rims (3) - (4)	Tubeless Seal CAI (4)	Tube Type Ref. / Flap (4)
25"												
525/80 R 25 Tubeless												
MICHELIN XGC 179E 822796 (8)	70 43.5		522 20.6	1490 58.7	681 26.8	4520 178	31 39.1		508 134	17.00/2.0 **17.00/1.7 CR**	OR 3-25 SULLA 553200	24/25 VAM / 17-24/25 (8)
525/80 R 25 Tubeless												
MICHELIN XL B 179E 758060	70 43.5		513 20.2	1486 58.5	678 26.7	4505 177.4	24 30.2		478 126	17.00/2.0 **17.00/1.7 CR**	OR 3-25 SULLA 553200	24/25 VAM / 17-24/25 (8)
21.00 R 25 Tubeless												
MICHELIN XS E7 276670 (9)			558 22	1750 68.9	767 30.2	5226 205.7	19 23.9		700 185	**15.00/3.0**	OR 3-25 SULLA 553200	25 YBAM / 17-24/25 (8)
21.00 R 25 Tubeless												
MICHELIN XK A L3 ** 270850	14 8.7		609 24	1768 69.6	800 31.5	5343 210.4	33 41.6		700 185	**15.00/3.0** 17.00/3.0	OR 3-25 SULLA 553200	25 YBAM / 17-24/25 (8)

CHARACTERISTICS OF MICHELIN EARTHMOVER TYRES

Tread type	Identification code (11)	Explanations on how to choose the tyre and to determine the inflation pressures Refer to explanations and methods allowing to determine the inflation pressure (10)

25"

	Machine - Use	bar / psi	5 / 73	6 / 87	7 / 102							
XGC	Cranes and Similar Specialized Machines	30 km/h 19 mph	7500 16538	8800 19404	10100 22271							
		40 km/h 25 mph	7150 15766	8350 18412	9600 21168							
		50 km/h 31 mph	6800 14994	7950 17530	9150 20176							
		60 km/h 37 mph	6440 14200	7560 16670	8680 19139							
		65 km/h 40 mph	6150 13561	7200 15876	8300 18302							
		70 km/h 43 mph	5750 12679	6750 14884	7750 17089							
		80 km/h 50 mph	4725 10419	5550 12238	6350 14002							
		90 km/h 56 mph	4050 8930	4750 10474	5450 12017							
		100 km/h 62 mph	3450 7607	4050 8930	4650 10253							

	Machine - Use	bar / psi	2 / 29	3 / 44	4 / 58	5 / 73	6 / 87	7 / 102				
XL B	Cranes and Similar Specialized Machines	30 km/h 19 mph	3700 8159	4950 10915	6200 13671	7500 16538	8800 19404	10100 22271				
		40 km/h 25 mph	3525 7773	4700 10364	5900 13010	7150 15766	8350 18412	9600 21168				
		50 km/h 31 mph	3375 7442	4475 9867	5600 12348	6800 14994	7950 17530	9150 20176				
		65 km/h 40 mph	3050 6725	4075 8985	5100 11246	6150 13561	7200 15876	8300 18302				
		70 km/h 43 mph	2850 6284	3800 8379	4750 10474	5750 12679	6750 14884	7750 17089				
		80 km/h 50 mph	2325 5127	3125 6891	3900 8600	4725 10419	5550 12238	6350 14002				
		90 km/h 56 mph	2000 4410	2650 5843	3350 7387	4050 8930	4750 10474	5450 12017				
		100 km/h 62 mph	1700 3749	2275 5016	2850 6284	3450 7607	4050 8930	4650 10253				

	Machine - Use	bar / psi	1 / 15	1.5 / 22	2 / 29	2.5 / 36	3 / 44	3.5 / 51	4 / 58	4.5 / 65	5 / 73	6 / 87
XS E7	Desert conditions 65 km/h max.	Road in single	2500 5513	3050 6725	3750 8269	4500 9923	5250 11576	6000 13230	6650 14663	7350 16207	8050 17750	9500 20948
		Road in twin	2250 4961	2745 6053	3375 7442	4050 8930	4725 10419	5400 11907	6435 14189	6615 14586	7245 15975	8550 18853
		Track in single	2750 6064	3750 8269	4750 10474	5800 12789	6800 14994	7800 17199				
		Track in twin	2475 5457	3375 7442	4275 9426	5220 11510	6120 13495	7020 15479				
		Sand in single	4250 9371	6000 13230	7600 16758							
		Sand in twin	3825 8434	5400 11907	6840 15082							

	Machine - Use	bar / psi	4 / 58	4.5 / 65	5 / 73	5.5 / 80	6 / 87	6.5 / 94	7 / 102	7.5 / 109	8 / 116	
XK A **L3	Transport	Standard	8350 18412	9100 20066	9850 21719	10600 23373	11400 25137	12150 26791	12550 27673	12925 28500	13300 29327	

CHARACTERISTICS OF MICHELIN EARTHMOVER TYRES

COMMERCIAL DESCRIPTION Types CAI (Part Number)	Max. dist./ hour km Miles	TKPH TMPH (1)	DIMENSIONAL CHARACTERISTICS (2) Michelin dimensions e mm inches	D mm inches	R' mm inches	RC mm inches	Tread depth mm 32rd	Entraxe mm inches	Cap. l galon	Measuring Rim Approved Rims (3) - (4)	Tubeless Seal CAI (4)	Tube Type Ref. Flap (4)
25"												
21.00 R 25 Tubeless												
MICHELIN XK A L3 ** 270850	14 8.7		609 24	1768 69.6	800 31.5	5343 210.4	33 41.6		700 185	**15.00/3.0** 17.00/3.0	OR 3-25 SULLA 553200	25 YBAM 17-24/25 (8)
550/65 R 25 Tubeless												
MICHELIN XLD 65 L3T * 123570	16 9.9		549 21.6	1400 55.1	600 23.6	4147 163.3	32 40.3		450 119	17.00/2.0 **17.00/1.7**	OR 3-25 SULLA 553200 OR 2-25 HEUPO 553201	24/25 VAM 17-24/25 (8)
23.5 R 25 Tubeless												
MICHELIN XADN+ E3 ** 185B 295773	28 17.4	207 142	602 23.7	1598 62.9	721 28.4	4824 189.9	38 47.9		702 185	**19.50/2.5**	OR 3-25 SULLA 553200	25 WAM 18-24/25 (8)
MICHELIN XADN E3T ** 185B 123417 (8)	28 17.4		601 23.7	1612 63.5	719 28.3	4846 190.8	38 47.9		654 173			
MICHELIN X-SUPER TERRAIN+ E4 ** 185B 002583	26 16.2	192 132	607 23.9	1614 63.5	725 28.5	4864 191.5	51 64.3		652 172			
MICHELIN X-SUPER TERRAIN AD E4T ** 185B 769360	26 16.2		603 23.7	1623 63.9	728 28.7	4890 192.5	51 64.3		650 172			
23.5 R 25 Tubeless												
MICHELIN XSNOPLUS L2T * 460452	16 9.9		603 23.7	1610 63.4	687 27	4761 187.4	34 42.8		670 177	**19.50/2.5**	OR 3-25 SULLA 553200	25 WAM 18-24/25 (8)
MICHELIN XTL A L2 * 123445 (5)			596 23.5	1614 63.5	686 27	4766 187.6			680 180			
MICHELIN XHA2 L3 * 195A2 139147			599 23.6	1612 63.5	690 27.2	4773 187.9	36 45.4		672 178			
MICHELIN XK A L3 ** 263670 (12)	14 8.7		632 24.9	1611 63.4	702 27.6	4802 189.1	30 37.8		635 168			
MICHELIN XLD D2 A L5T * 123326	10 6.2		612 24.1	1662 65.4	722 28.4	4947 194.8	77 97		600 159			
MICHELIN XMINE D2 L5 ** 199408	6 3.7		637 25.1	1656 65.2	751 29.6	5009 197.2	83 104.6		590 156			
MICHELIN XMINE D2 L5R * 266931 (8)					707 27.8	4898 192.8						

CHARACTERISTICS OF MICHELIN EARTHMOVER TYRES

Tread type	Identification code (11)	Explanations on how to choose the tyre and to determine the inflation pressures Refer to explanations and methods allowing to determine the inflation pressure (10)

25"

	Machine - Use	bar / psi	2 / 29	3 / 44	4 / 58	5 / 73	6 / 87	7 / 102	8 / 116			
XK A **L3	Underground mine machines	Front and Rear	6600 / 14553	8500 / 18743	10400 / 22932	12300 / 27122	14250 / 31421	15650 / 34508	16600 / 36603			

	Machine - Use	bar / psi	2 / 29	2.25 / 33	2.5 / 36	3 / 44	3.25 / 47	3.5 / 51	4 / 58	4.25 / 62	4.5 / 65	5 / 73
XLD 65 *L3T	Loaders	Front tip.load	7850 / 17309	8575 / 18908	9300 / 20507	10700 / 23594	11440 / 25225	12150 / 26791	13600 / 29988	14320 / 31576	15040 / 33163	16480 / 36338
		Front laden	4900 / 10805	5350 / 11797	5800 / 12789	6700 / 14774	7150 / 15766	7600 / 16758	8500 / 18743	8950 / 19735	9400 / 20727	10300 / 22712
		Rear unladen	3925 / 8655	4290 / 9459	4650 / 10253	5350 / 11797	5720 / 12613	6075 / 13395	6800 / 14994	7165 / 15799	7525 / 16593	8250 / 18191
XLD 65 *L3T	Graders	Front and Rear	2940 / 6483	3210 / 7078	3480 / 7673	4020 / 8864	4290 / 9459	4560 / 10055	5100 / 11246			

	Machine - Use	bar / psi	2 / 29	2.5 / 36	3 / 44	3.5 / 51	3.75 / 54	4 / 58	4.5 / 65	5 / 73	5.5 / 80	
XADN **E3T X-SUPER TERRAIN AD **E4T	Articulated dumpers	Standard	5650 / 12458	6380 / 14068	7100 / 15656	7800 / 17199	8175 / 18026	8550 / 18853	9250 / 20396	9950 / 21940	10350 / 22822	
XADN+ **E3 X-SUPER TERRAIN+ **E4	Articulated dumpers	Standard	4930 / 10871	5650 / 12458	6380 / 14068	7100 / 15656	7450 / 16427	7800 / 17199	8550 / 18853	9250 / 20396		

	Machine - Use	bar / psi	2 / 29	2.5 / 36	3 / 44	3.5 / 51	4 / 58	4.5 / 65	5 / 73	5.5 / 80	6 / 87	6.5 / 94
XSNOPLUS *L2T XTL A *L2 XHA2 *L3 XLD D2 A *L5T XMINE D2 *L5R	Loader	Front tip.load	12950 / 28555	14550 / 32083	16250 / 35831	17850 / 39359	19450 / 42887					
		Front laden	8100 / 17861	9100 / 20066	10150 / 22381	11150 / 24586	12150 / 26791					
		Rear unladen	6500 / 14333	7300 / 16097	8100 / 17861	8900 / 19625	9700 / 21389					
XK A **L3	Loader	Front tip.load	12950 / 28555	14550 / 32083	16250 / 35831	17850 / 39359	19450 / 42887	21350 / 47077	22230 / 49017	23200 / 51156		
		Front laden	8100 / 17861	9100 / 20066	10150 / 22381	11150 / 24586	12150 / 26791	13350 / 29437	13900 / 30650	14500 / 31973		
		Rear unladen	6500 / 14333	7300 / 16097	8100 / 17861	8900 / 19625	9700 / 21389	10700 / 23594	11160 / 24608	11600 / 25578		
XMINE D2 **L5	Loader	Front tip.load			13200 / 29106	14800 / 32634	16480 / 36338	17920 / 39514	19440 / 42865	20560 / 45335	21760 / 47981	23200 / 51156
		Front laden			8250 / 18191	9250 / 20396	10300 / 22712	11200 / 24696	12150 / 26791	12850 / 28334	13600 / 29988	14500 / 31973
		Rear unladen			6600 / 14553	7400 / 16317	8240 / 18169	8960 / 19757	9720 / 21433	10280 / 22667	10880 / 23990	11600 / 25578
XSNOPLUS *L2T XTL A *L2 XHA2 *L3 XLD D2 A *L5T	Graders	Front and Rear	4875 / 10749	5425 / 11962	6000 / 13230							
XK A **L3 XLD D2 A *L5T XMINE D2 *L5R	Underground Tansport Machine	Front and Rear			7300 / 16097	8250 / 18191	9000 / 19845	9750 / 21499	10600 / 23373	11500 / 25358		
XMINE D2 **L5	Underground Tansport Machine	Front and Rear			7300 / 16097	8250 / 18191	9000 / 19845	9750 / 21499	10600 / 23373	11500 / 25358	12150 / 26791	12850 / 28334

CHARACTERISTICS OF MICHELIN EARTHMOVER TYRES

COMMERCIAL DESCRIPTION Types CAI (Part Number)	Max. dist./ hour km Miles	TKPH TMPH (1)	DIMENSIONAL CHARACTERISTICS (2) Michelin dimensions e	D	R'	RC	Tread depth	Entraxe	Cap.	Measuring Rim Approved Rims (3) - (4)	Tubeless Seal CAI (4)	Tube Type Ref. Flap (4)
			mm inches	mm inches	mm inches	mm inches	mm 32rd	mm inches	l galon			
25"												
23.5 R 25 Tubeless												
MICHELIN XL B E2 188E 123474	70 43.5		598 23.5	1619 63.7	738 29.1	4905 193.1	27 34		700 185	19.50/2.5	OR 3-25 SULLA 553200	25 WAM 18-24/25 (8)
600/65 R 25 Tubeless												
MICHELIN XLD 65 L3T * 063799	16 9.9		622 24.5	1429 56.3	617 24.3	4246 167.2	34 42.8		484 128	17.00/1.7 17.00/2.0 **19.50/2.5**	OR 3-25 SULLA 553200	
650/65 R 25 Tubeless												
MICHELIN XAD 65-1 SUPER E3T ** 180B 840573	28 17.4	179 123	630 24.8	1494 58.8	669 26.3	4498 177.1	40 50.4		595 157	**19.50/2.5** 22.00/3.0	OR 3-25 SULLA 553200	
650/65 R 25 Tubeless												
MICHELIN XLD 65 L3T * 123820	16 9.9		634 25	1498 59	637 25.1	4425 174.2	37 46.6		596 157	**19.50/2.5**	OR 3-25 SULLA 553200	
26.5 R 25 Tubeless												
MICHELIN XADN+ E3 ** 193B 154324	28 17.4	258 177	687 27	1726 68	773 30.4	5196 204.6	41 51.7		908 240	22.00/3.0 IF **22.00/3.0**	OR 3-25 SULLA 553200	25 YBAM 18-24/25 (8)
MICHELIN XADN E3T ** 193B 123427 (8)	28 17.4		675 26.6	1728 68	769 30.3	5190 204.3	41 51.7		900 238			
MICHELIN X-SUPER TERRAIN+ E4 ** 193B 039476	24 14.9	221 151	691 27.2	1749 68.9	783 30.8	5266 207.3	54 68		862 228			
MICHELIN X-SUPER TERRAIN AD E4T ** 193B 689443 (8, 9)	24 14.9		680 26.8	1740 68.5	774 30.5	5225 205.7	54 68		862 228			

CHARACTERISTICS OF MICHELIN EARTHMOVER TYRES

Tread type	Identification code (11)	Explanations on how to choose the tyre and to determine the inflation pressures Refer to explanations and methods allowing to determine the inflation pressure (10)

25"

	Machine - Use	bar / psi	2 / 29	3 / 44	4 / 58	5 / 73	6 / 87	7 / 102				
XL B E2	Cranes and Similar Specialized Machines	30 km/h 19 mph	4750 10474	6350 14002	7950 17530	9600 21168	11300 24917	13000 28665				
		40 km/h 25 mph	4550 10033	6050 13340	7550 16648	9200 20286	10800 23814	12400 27342				
		50 km/h 31 mph	4325 9537	5750 12679	7200 15876	8750 19294	10300 22712	11800 26019				
		65 km/h 40 mph	3925 8655	5200 11466	6550 14443	7900 17420	9300 20507	10700 23594				
		70 km/h 43 mph	3660 8070	4880 10760	6100 13451	7400 16317	8700 19184	10000 22050				
		80 km/h 50 mph	3000 6615	4000 8820	5000 11025	6050 13340	7150 15766	8200 18081				
		90 km/h 56 mph	2550 5623	3425 7552	4250 9371	5200 11466	6100 13451	7000 15435				
		100 km/h 62 mph	2100 4631	2925 6450	3650 8048	4400 9702	5200 11466	6000 13230				

	Machine - Use	bar / psi	2 / 29	2.5 / 36	3 / 44	3.5 / 51	4 / 58	4.5 / 65	5 / 73			
XLD 65*L3T	Loaders	Front tip.load	9040 19933	10680 23549	12320 27166	13960 30782	15600 34398	17160 37838	18720 41278			
		Front laden	5650 12458	6675 14718	7700 16979	8725 19239	9750 21499	10725 23649	11700 25799			
		Rear unladen	4520 9967	5340 11775	6160 13583	6980 15391	7800 17199	8580 18919	9360 20639			
XLD 65*L3T	Graders	Front and Rear	3390 7475	4005 8831	4600 10143							

	Machine - Use	bar / psi	2.5 / 36	3 / 44	3.5 / 51	4 / 58						
XAD 65-1**SUPER E3T	Articulated dumpers	Standard	5450 12017	6300 13892	7150 15766	8000 17640						

	Machine - Use	bar / psi	2 / 29	2.5 / 36	3 / 44	3.5 / 51	4 / 58	4.5 / 65	5 / 73			
XLD 65*L3T	Loaders	Front tip.load	10800 23814	12700 28004	14600 32193	16500 36383	18400 40572	20300 44762	22200 48951			
		Front laden	6700 14774	7900 17420	9100 20066	10300 22712	11500 25358	12700 28004	13900 30650			
		Rear unladen	5400 11907	6350 14002	7300 16097	8250 18191	9200 20286	10150 22381	11100 24476			
XLD 65*L3T	Graders	Front and Rear	4100 9041	4800 10584	5500 12128	6200 13671	6900 15215	7600 16758	8300 18302			

	Machine - Use	bar / psi	2 / 29	2.5 / 36	3 / 44	3.25 / 47	3.5 / 51	4 / 58	4.5 / 65	5 / 73		
XADN**E3T X-SUPER TERRAIN AD**E4T	Articulated dumpers	Standard	6500 14333	7500 16538	8500 18743	9000 19845	9500 20948	10500 23153	11500 25358			
XADN+**E3 X-SUPER TERRAIN+**E4	Articulated dumpers	Standard		6500 14333	7500 16538	8000 17640	8500 18743	9500 20948	10500 23153	11500 25358		

CHARACTERISTICS OF MICHELIN EARTHMOVER TYRES

COMMERCIAL DESCRIPTION Types CAI (Part Number)	Max. dist./ hour km Miles	TKPH TMPH (1)	DIMENSIONAL CHARACTERISTICS (2) Michelin dimensions e mm inches	D mm inches	R' mm inches	RC mm inches	Tread depth mm 32rd	Entraxe mm inches	Cap. l galon	Measuring Rim Approved Rims (3) - (4)	Tubeless Seal CAI (4)	Tube Type Ref. Flap (4)
25"												
26.5 R 25 Tubeless												
MICHELIN XHA2 L3 ** 209A2 893825	16 9.9		678 26.7	1732 68.2	740 29.1	5125 201.8	41 51.7		879 232	22.00/3.0 IF **22.00/3.0**	OR 3-25 SULLA 553200	25 YBAM 18-24/25 (8)
MICHELIN XK A L3 ** 273360 (8, 12)	14 8.7		714 28.1	1734 68.3	763 30	5186 204.2	35 44.1		855 226			
MICHELIN XSM DN L3S 123022 (9)	10 6.2		724 28.5	1726 68	770 30.3	5189 204.3	48 60.5		890 235			
MICHELIN XLD D1 A L4R * 123495	14 8.7		690 27.2	1803 71	780 30.7	5360 211	53 66.8		947 250			
MICHELIN XLD D2 A L5T * 123094	10 6.2		687 27	1800 70.9	778 30.6	5348 210.6	87 109.6		825 218			
MICHELIN XMINE D2 L5 ** 164572	6 3.7		718 28.3	1795 70.7	807 31.8	5413 213.1	91 114.6		812 215			
MICHELIN XMINE D2 L5R * 273400 (8)				1794 70.6	751 29.6	5269 207.4			820 217			
MICHELIN XSM D2+ L5S ** 995669	4 2.5		692 27.2	1790 70.5	806 31.7	5400 212.6	102 128.5		771 204			
MICHELIN XSM D2+ L5S 123687 (8)				1788 70.4	798 31.4	5376 211.7			760 201			
26.5 R 25 Tubeless												
MICHELIN XSM DN+ L3S *** 569259 (7, 9)	10 6.2		704 27.7	1727 68	770 30.3	5192 204.4	44 55.4		836 221	22.00/3.0 IF **22.00/3.0**	OR 3-25 SULLA 553200	25 YBAM 18-24/25 (8)
26.5 R 25 Tubeless												
MICHELIN XTXL E4 **** L4 *** 214A2 039149	14 8.7 if load per tyre ≤ 18.5 t 12 7.5 if load per tyre > 18.5 t	180 123	687 27	1722 67.8	755 29.7	5143 202.5	54 68		789 208	**22.00/3.0** 22.00/3.0 IF	OR 3-25 SULLA 553200	25 YBAM 18-24/25 (8)
MICHELIN XTXL E4 **** 321951					763 30	5164 203.3			817 216			

CHARACTERISTICS OF MICHELIN EARTHMOVER TYRES

Tread type	Identification code (11)	Explanations on how to choose the tyre and to determine the inflation pressures Refer to explanations and methods allowing to determine the inflation pressure (10)

25"

Tread type	Machine - Use	bar / psi	2 / 29	2.5 / 36	3 / 44	3.5 / 51	4 / 58	4.5 / 65	5 / 73	5.5 / 80	6 / 87	6.5 / 94
XSM DN L3S XLD D1 A *L4R XLD D2 A *L5T XMINE D2 *L5R XSM D2+ L5S	Loader	Front tip.load	13000 28665	14400 31752	17000 37485	19050 42005	21000 46305	22600 49833	24300 53582	25900 57110		
		Front laden	9300 20507	10300 22712	12150 26791	13600 29988	15000 33075	16150 35611	17350 38257	18500 40793		
		Rear unladen	7450 16427	8250 18191	9700 21389	10900 24035	12000 26460	12900 28445	13900 30650	14800 32634		
XHA2 **L3	Loader	Front tip.load	13000 28665	14400 31752	17000 37485	19050 42005	21000 46305	22600 49833	24300 53582	25900 57110		
		Front laden	9300 20507	10300 22712	12150 26791	13600 29988	15000 33075	16150 35611	17350 38257	18500 40793		
		Rear unladen	7450 16427	8250 18191	9700 21389	10900 24035	12000 26460	12900 28445	13900 30650	14800 32634		
XK A **L3 XMINE D2 **L5 XSM D2+ **L5S	Loader	Front tip.load			14420 31796	16100 35501	17990 39668	19600 43218	21000 46305	22400 49392	23800 52479	25900 57110
		Front laden			10300 22712	11500 25358	12850 28334	14000 30870	15000 33075	16000 35280	17000 37485	18500 40793
		Rear unladen			8240 18169	9200 20286	10280 22667	11200 24696	12000 26460	12800 28224	13600 29988	14800 32634
XHA2 **L3	Graders	Front and Rear	5400 11907	6400 14112	7500 16538							
XSM DN L3S XLD D1 A *L4R XLD D2 A *L5T XMINE D2 *L5R	Underground Tansport Machine	Front and Rear			9000 19845	10300 22712	11200 24696	12500 27563	13200 29106	14500 31973		
XK A **L3 XMINE D2 **L5	Underground Tansport Machine	Front and Rear			9000 19845	10300 22712	11200 24696	12500 27563	13200 29106	14500 31973	15500 34178	16500 36383

Tread type	Machine - Use	bar / psi	3 / 44	4 / 58	4.5 / 65	5 / 73	5.5 / 80	6 / 87	6.5 / 94	7 / 102	7.5 / 109	8 / 116
XSM DN+ ***L3S	Loader	Front tip.load	12750 28114	16700 36824	17750 39139	19600 43218	21100 46526	22750 50164	24250 53471	25950 57220	27750 61189	29680 65444
		Front laden	10300 22712	12850 28334	14000 30870	15000 33075	16000 35280	17000 37485	18500 40793	19500 42998	20600 45423	21200 46746
		Rear unladen	9100 20066	10600 23373	11450 25247	12300 27122	13100 28886	13800 30429	14650 32303	15400 33957	16200 35721	16850 37154

Tread type	Machine - Use	bar / psi	3 / 44	4 / 58	4.5 / 65	5 / 73	5.5 / 80	6 / 87	6.5 / 94	7 / 102	7.5 / 109	8 / 116
XTXL E4 ****L4 ***	Loader load per tyre ≤ 18.5 t	Front tip.load	14420 31796	17990 39668	19600 43218	21000 46305	22400 49392	23800 52479	25900 57110			
		Front laden	10300 22712	12850 28334	14000 30870	15000 33075	16000 35280	17000 37485	18500 40793			
		Rear unladen	8240 18169	10280 22667	11200 24696	12000 26460	12800 28224	13600 29988	14800 32634			
XTXL E4 ****L4 ***	Loader load per tyre > 18.5 t	Front tip.load								27300 60197	28840 63592	29680 65444
		Front laden								19500 42998	20600 45423	21200 46746
		Rear unladen								15600 34398	16480 36338	16960 37397
XTXL E4 ****L4 *** XTXL ****E4	Underground Tansport Machine	Front and Rear	9000 19845	11200 24696	12500 27563	13200 29106	14500 31973	15500 34178	16500 36383	17000 37485	18000 39690	19000 41895

CHARACTERISTICS OF MICHELIN EARTHMOVER TYRES

COMMERCIAL DESCRIPTION Types CAI (Part Number)	Max. dist./ hour km Miles	TKPH TMPH (1)	DIMENSIONAL CHARACTERISTICS (2) Michelin dimensions e mm inches	D mm inches	R' mm inches	RC mm inches	Tread depth mm 32rd	Entraxe mm inches	Cap. l galon	Measuring Rim Approved Rims (3) - (4)	Tubeless Seal CAI (4)	Tube Type Ref. Flap (4)
25"												
26.5 R 25 Tubeless												
MICHELIN XL B E2 195E 123484	70 43.5		670 26.4	1752 69	800 31.5	5313 209.2	30 37.8		860 227	22.00/3.0	OR 3-25 SULLA 553200	25 YBAM 18-24/25 (8)
29.5 R 25 Tubeless												
MICHELIN XADN+ E3 ** 200B 597428	28 17.4	314 215	767 30.2	1858 73.1	826 32.5	5578 219.6	44 55.4		1221 323	25.00/3.5	OR 3-25 SULLA 553200	25 YBAM 19-25 (8)
MICHELIN XADN E3T ** 200B 123437 (8)	28 17.4		743 29.3	1850 72.8	817 32.2	5541 218.1	44 55.4		1180 312			
MICHELIN X-SUPER TERRAIN+ E4 ** 200B 973483	22 13.7	246 169	769 30.3	1869 73.6	836 32.9	5625 221.5	60 75.6		1152 304			
MICHELIN X-SUPER TERRAIN AD E4T ** 200B 111168 (8)	22 13.7		762 30	1858 73.1	825 32.5	5576 219.5	60 75.6		1120 296			
29.5 R 25 Tubeless												
MICHELIN XHA2 L3 ** 216A2 961307	16 9.9		747 29.4	1860 73.2	795 31.3	5504 216.7	43 54.2		1177 311	25.00/3.5	OR 3-25 SULLA 553200	25 YBAM 19-25 (8)
MICHELIN XK A L3 ** 273560 (8, 12)	14 8.7		793 31.2	1862 73.3	802 31.6	5525 217.5	38 47.9		1145 303			
MICHELIN XLD D1 A L4R * 123741			769 30.3	1906 75	821 32.3	5656 222.7	58 73.1		1171 309			
MICHELIN XLD D2 A L5T * 123278	10 6.2		762 30	1900 74.8		5645 222.2	95 119.7		985 260			
MICHELIN XMINE D2 L5 ** 221069	6 3.7		804 31.7	1903 74.9	850 33.5	5725 225.4	99 124.7		980 259			
MICHELIN XMINE D2 L5R 273527 (8)				1900 74.8	838 33	5688 223.9	100 126		988 261			

CHARACTERISTICS OF MICHELIN EARTHMOVER TYRES

Tread type	Identification code (11)	Explanations on how to choose the tyre and to determine the inflation pressures Refer to explanations and methods allowing to determine the inflation pressure (10)

25"

	Machine - Use	bar / psi	2 / 29	3 / 44	4 / 58	5 / 73	6 / 87	7 / 102				
XL B E2	Cranes and Similar Specialized Machines	30 km/h 19 mph	5850 12899	7800 17199	9750 21499	11800 26019	13800 30429	15800 34839				
		40 km/h 25 mph	5600 12348	7450 16427	9300 20507	11200 24696	13100 28886	15100 33296				
		50 km/h 31 mph	5300 11687	7100 15656	8850 19514	10700 23594	12500 27563	14300 31532				
		65 km/h 40 mph	4825 10639	6400 14112	8050 17750	9700 21389	11300 24917	13000 28665				
		70 km/h 43 mph	4500 9923	6000 13230	7500 16538	9050 19955	10600 23373	12150 26791				
		80 km/h 50 mph	3700 8159	4925 10860	6150 13561	7400 16317	8700 19184	9950 21940				
		90 km/h 56 mph	3150 6946	4200 9261	5250 11576	6350 14002	7400 16317	8400 18522				
		100 km/h 62 mph	2700 5954	3600 7938	4500 9923	5450 12017	6350 14002	7300 16097				

	Machine - Use	bar / psi	2 / 29	2.5 / 36	3 / 44	3.25 / 47	3.5 / 51	4 / 58	4.5 / 65	5 / 73		
XADN ** E3T X-SUPER TERRAIN AD ** E4T	Articulated dumpers	Standard	7800 17199	9050 19955	10300 22712	10900 24035	11500 25358	12750 28114	14000 30870			
XADN+ ** E3 X-SUPER TERRAIN+ ** E4	Articulated dumpers	Standard		7800 17199	9050 19955	9675 21333	10300 22712	11500 25358	12750 28114	14000 30870		

	Machine - Use	bar / psi	2 / 29	2.5 / 36	3 / 44	3.5 / 51	4 / 58	4.5 / 65	5 / 73	5.5 / 80	6 / 87	6.5 / 94
XLD D1 A * L4R XLD D2 A * L5T XMINE D2 L5R	Loader	Front tip.load	15600 34398	17200 37926	20450 45092	22800 50274	25200 55566	27250 60086	29350 64717	31350 69127		
		Front laden	11150 24586	12300 27122	14600 32193	16300 35942	18000 39690	19450 42887	20950 46195	22400 49392		
		Rear unladen	8900 19625	9850 21719	11700 25799	13050 28775	14400 31752	15550 34288	16750 36934	17900 39470		
XHA2 ** L3 XK A ** L3	Loader	Front tip.load	15600 34398	17200 37926	20450 45092	22800 50274	25200 55566	27250 60086	29350 64717	31350 69127		
		Front laden	11150 24586	12300 27122	14600 32193	16300 35942	18000 39690	19450 42887	20950 46195	22400 49392		
		Rear unladen	8900 19625	9850 21719	11700 25799	13050 28775	14400 31752	15550 34288	16750 36934	17900 39470		
XMINE D2 ** L5	Loader	Front tip.load			17500 38588	19600 43218	21700 47849	23800 52479	25200 55566	27300 60197	28840 63592	31360 69149
		Front laden			12500 27563	14000 30870	15500 34178	17000 37485	18000 39690	19500 42998	20600 45423	22400 49392
		Rear unladen			10000 22050	11200 24696	12400 27342	13600 29988	14400 31752	15600 34398	16480 36338	17920 39514
XK A ** L3 XLD D1 A * L4R XLD D2 A * L5T XMINE D2 L5R	Underground Tansport Machine	Front and Rear			10900 24035	12150 26791	13600 29988	15000 33075	16000 35280	17500 38588		
XMINE D2 ** L5	Underground Tansport Machine	Front and Rear			10900 24035	12150 26791	13600 29988	15000 33075	16000 35280	17500 38588	18500 40793	19500 42998

CHARACTERISTICS OF MICHELIN EARTHMOVER TYRES

COMMERCIAL DESCRIPTION Types CAI (Part Number)	Max. dist./ hour km Miles	TKPH TMPH (1)	DIMENSIONAL CHARACTERISTICS (2) Michelin dimensions e mm inches	D mm inches	R' mm inches	RC mm inches	Tread depth mm 32rd	Entraxe mm inches	Cap. l galon	Measuring Rim Approved Rims (3) - (4)	Tubeless Seal CAI (4)	Tube Type Ref. Flap (4)
25"												
29.5 R 25 Tubeless												
MICHELIN XS SAND E7 **196E 458236 (9)			747 29.4	1820 71.7	796 31.3	5431 213.8	22 27.7		1200 317	25.00/3.5	OR 3-25 SULLA 553200	25 YBAM 19-25 (8)
29.5 R 25 Tubeless												
MICHELIN XADN E E3V **200E 123703 (9)	50 31.1	560 384	743 29.3	1850 72.8	817 32.2	5541 218.1	44 55.4		1180 312	25.00/3.5	OR 3-25 SULLA 553200	25 YBAM 19-25 (8)
MICHELIN XS SAND E7 **196E 458236 (9)			747 29.4	1820 71.7	796 31.3	5431 213.8	22 27.7		1200 317			
29.5 R 25 Tubeless												
MICHELIN XTXL E4 ** L4 *** 221A2** 427926	14 8.7 if load per tyre ≤ 22.4 t 12 7.5 if load per tyre > 22.4 t	220 151	775 30.5	1822 71.7	796 31.3	5435 214	59 74.3		1029 272	25.00/3.5	OR 3-25 SULLA 553200	25 YBAM 19-25 (8)
MICHELIN XTXL E4 **** 775766					804 31.7	5455 214.8						
750/65 R 25 Tubeless												
MICHELIN XAD 65-1 SUPER E3T **190B 123895	28 17.4	237 162	738 29.1	1599 63	701 27.6	4777 188.1	43 54.2		810 214	22.00/3.0 **24.00/3.0** 25.00/3.0	OR 3-25 SULLA 553200	
750/65 R 25 Tubeless												
MICHELIN XLD 65 L3T * 123940	16 9.9		747 29.4	1591 62.6	683 26.9	4714 185.6	41 51.7		788 208	22.00/3.0 **24.00/3.0**	OR 3-25 SULLA 553200	
850/65 R 25 Tubeless												
MICHELIN XAD 65-1 SUPER E3T **196B 978610 (8)	28 17.4	280 192	811 31.9	1729 68.1	753 29.6	5150 202.8	47 59.2		1115 295	**25.00/3.5** 27.00/3.5 27.00/3.0	OR 3-25 SULLA 553200	

CHARACTERISTICS OF MICHELIN EARTHMOVER TYRES

Tread type	Identification code (11)	Explanations on how to choose the tyre and to determine the inflation pressures Refer to explanations and methods allowing to determine the inflation pressure (10)

25"

	Machine - Use	bar / psi	2 / 29	2.3 / 33	2.5 / 36	2.7 / 39	2.9 / 42	3.3 / 48	3.7 / 54	4.1 / 60	4.5 / 65	4.9 / 71
XS SAND ** E7	Desert conditions 65 km/h max.	Road in single							11000 / 24255	12000 / 26460	13000 / 28665	14000 / 30870
		Track in single						11000 / 24255	12000 / 26460	13000 / 28665	14000 / 30870	
		Sand in single	11000 / 24255	12000 / 26460	12500 / 27563	13000 / 28665	14000 / 30870					

	Machine - Use	bar / psi	2 / 29	2.5 / 36	3 / 44	3.25 / 47	3.5 / 51	4 / 58	4.5 / 65	5 / 73	5.5 / 80	
XADN E ** E3V XS SAND ** E7	Articulated dumpers	Standard	7800 / 17199	9050 / 19955	10300 / 22712	10900 / 24035	11500 / 25358	12750 / 28114	14000 / 30870			
		70 km/h 43 mph			7800 / 17199	8575 / 18908	9350 / 20617	10900 / 24035	11500 / 25358	12750 / 28114	14000 / 30870	

	Machine - Use	bar / psi	3 / 44	4 / 58	4.5 / 65	5 / 73	5.5 / 80	6 / 87	6.5 / 94	7 / 102	7.5 / 109	8 / 116
XTXL E4 **** L4 ***	Loader load per tyre ≤ 22.4 t	Front tip.load	17500 / 38588	21700 / 47849	23800 / 52479	25200 / 55566	27300 / 60197	28840 / 63592	31360 / 69149			
		Front laden	12500 / 27563	15500 / 34178	17000 / 37485	18000 / 39690	19500 / 42998	20600 / 45423	22400 / 49392			
		Rear unladen	10000 / 22050	12400 / 27342	13600 / 29988	14400 / 31752	15600 / 34398	16480 / 36338	17920 / 39514			
XTXL E4 **** L4 ***	Loader load per tyre > 22.4 t	Front tip.load								33040 / 72853	34020 / 75014	36050 / 79490
		Front laden								23600 / 52038	24300 / 53582	25750 / 56779
		Rear unladen								18880 / 41630	19440 / 42865	20600 / 45423
XTXL E4 **** L4 *** XTXL **** E4	Underground Tansport Machine	Front and Rear	10900 / 24035	13600 / 29988	15000 / 33075	16000 / 35280	17500 / 38588	18500 / 40793	19500 / 42998	20600 / 45423	21800 / 48069	23000 / 50715

	Machine - Use	bar / psi	2.5 / 36	3 / 44	3.25 / 47	3.5 / 51	4 / 58					
XAD 65-1 ** SUPER E3T	Articulated dumpers	Standard	7350 / 16207	8400 / 18522	8950 / 19735	9500 / 20948	10600 / 23373					

	Machine - Use	bar / psi	2 / 29	2.5 / 36	3 / 44	3.25 / 47	3.5 / 51	4 / 58	4.5 / 65	5 / 73	5.5 / 80	
XLD 65 * L3T	Loaders	Front tip.load	11750 / 25909	13600 / 29988	15450 / 34067	16375 / 36107	17300 / 38147	19150 / 42226	21000 / 46305	22850 / 50384	24700 / 54464	
		Front laden	8400 / 18522	9720 / 21433	11040 / 24343	11700 / 25799	12360 / 27254	13680 / 30164	15000 / 33075	16320 / 35986	17640 / 38896	
		Rear unladen	6725 / 14829	7775 / 17144	8825 / 19459	9365 / 20650	9900 / 21830	10950 / 24145	12000 / 26460	13050 / 28775	14100 / 31091	
XLD 65 * L3T	Graders	Front and Rear	5040 / 11113	5830 / 12855	6620 / 14597	7020 / 15479	7420 / 16361	8210 / 18103				

	Machine - Use	bar / psi	2.75 / 40	3 / 44	3.25 / 47	3.5 / 51	3.75 / 54	4 / 58				
XAD 65-1 ** SUPER E3T	Articulated dumpers	Standard	9500 / 20948	10450 / 23042	11175 / 24641	11900 / 26240	12500 / 27563	13250 / 29216				

CHARACTERISTICS OF MICHELIN EARTHMOVER TYRES

COMMERCIAL DESCRIPTION Types CAI (Part Number)	Max. dist./ hour km Miles	TKPH TMPH (1)	DIMENSIONAL CHARACTERISTICS (2) Michelin dimensions e mm inches	D mm inches	R' mm inches	RC mm inches	Tread depth mm 32rd	Entraxe mm inches	Cap. l galon	Measuring Rim Approved Rims (3) - (4)	Tubeless Seal CAI (4)	Tube Type Ref. Flap (4)
29"												
26.5 R 29 Tubeless												
MICHELIN XK A L3 ** 273860 (8, 9)	14 8.7		712 28	1840 72.4	801 31.5	5478 215.7	35 44.1		855 226	22.00/3.0 24.00/3.0	OR 3-29 553202	29 WAM 19-29 (8)
MICHELIN XSM DN L3S * 123661 (9)	10 6.2		726 28.6	1830 72	811 31.9	5488 216.1	40 50.4		937 248			
26.5 R 29 Tubeless												
MICHELIN XSM DN+ L3S *** 317097 (9)	10 6.2		698 27.5	1830 72	820 32.3	5510 216.9	44 55.4		926 245	22.00/3.0 24.00/3.0	OR 3-29 553202	29 WAM 19-29 (8)
29.5 R 29 Tubeless												
MICHELIN XTS E3T ** 708648	29 18	348 238	765 30.1	1963 77.3	869 34.2	5884 231.7	43 54.2		1300 343	24.00/3.5 25.00/3.5	OR 3-29 553202	29 YEAM1 19-29 (8)
29.5 R 29 Tubeless												
MICHELIN XK A L3 ** 274110	14 8.7		793 31.2	1961 77.2	844 33.2	5819 229.1	38 47.9		1260 333	24.00/3.5 25.00/3.5	OR 3-29 553202	29 YEAM1 19-29 (8)
MICHELIN XLD D2 A L5T * 123279	10 6.2		772 30.4	2004 78.9	864 34	5949 234.2	95 119.7		985 260			
MICHELIN XMINE D2 L5 ** 965209 (7)	6 3.7		794 31.3	2005 78.9	896 35.3	6032 237.5	100 126		981 259			
MICHELIN XMINE D2 L5R 274050 (8)	6 3.7		796 31.3	2001 78.8	878 34.6	5980 235.4	100 126		990 262			
MICHELIN XSM D2+ L5S ** 358035 (7)	4 2.5		770 30.3	1994 78.5	893 35.2	6003 236.3	112 141.1		1123 297			
MICHELIN XSM D2+ L5S 123697 (8)	4 2.5		770 30.3	1992 78.4	884 34.8	5977 235.3	112 141.1		1116 295			
29.5 R 29 Tubeless												
MICHELIN XLD D2 A L5T * 123279	10 6.2		772 30.4	2004 78.9	864 34	5949 234.2	95 119.7		985 260	24.00/3.5 25.00/3.5	OR 3-29 553202	29 YEAM1 19-29 (8)
29.5 R 29 Tubeless												
MICHELIN XTXL E4 **** 512305 (7)		220 151	775 30.5	1928 75.9	855 33.7	5783 227.7	63 79.4		1139 301	24.00/3.5 25.00/3.5	OR 3-29 553202	
775/65 R 29 Tubeless												
MICHELIN XAD 65-1 SUPER E3T **195B 510085	28 17.4	272 186	785 30.9	1759 69.3	779 30.7	5272 207.6	45 56.7		1050 277	24.00/3.0 24.00/3.5 25.00/3.5	OR 3-29 553202	

CHARACTERISTICS OF MICHELIN EARTHMOVER TYRES

Tread type	Identification code (11)	Explanations on how to choose the tyre and to determine the inflation pressures Refer to explanations and methods allowing to determine the inflation pressure (10)

29"

	Machine - Use	bar / psi	4 / 58	4.25 / 62	4.5 / 65	5 / 73	5.25 / 76	5.5 / 80	5.75 / 83	6 / 87	6.25 / 91	6.5 / 94
XK A **L3 XSM DN*L3S	Loader	Front tip.load	19040 41983	19600 43218	21000 46305	22400 49392	23100 50936	24500 54023	25200 55566	25900 57110	26600 58653	27300 60197
		Front laden	13600 29988	14000 30870	15000 33075	16000 35280	16500 36383	17500 38588	18000 39690	18500 40793	19000 41895	19500 42998
		Rear unladen	10880 23990	11200 24696	12000 26460	12800 28224	13200 29106	14000 30870	14400 31752	14800 32634	15200 33516	15600 34398
XK A **L3 XSM DN*L3S	Underground Tansport Machine	Front and Rear	12150 26791	12500 27563	13200 29106	14500 31973	15000 33075	15500 34178	16000 35280	16500 36383	17000 37485	17500 38588

	Machine - Use	bar / psi	5 / 73	5.5 / 80	6 / 87	6.5 / 94	6.75 / 98	7 / 102	7.25 / 105	7.5 / 109	7.75 / 112	8 / 116
XSM DN+ ***L3S	Loader	Front tip.load	22400 49392	24500 54023	25900 57110	27300 60197	28000 61740	28840 63592	29680 65444	30520 67297	31360 69149	32200 71001
		Front laden	16000 35280	17500 38588	18500 40793	19500 42998	20000 44100	20600 45423	21200 46746	21800 48069	22400 49392	23000 50715
		Rear unladen	12800 28224	14000 30870	14800 32634	15600 34398	16000 35280	16480 36338	16960 37397	17440 38455	17920 39514	18400 40572

	Machine - Use	bar / psi	2 / 29	2.5 / 36	3 / 44	3.5 / 51	4 / 58	4.25 / 62	4.5 / 65	5 / 73	5.5 / 80	
XTS **E3T	Transport	Standard	9150 20176	10325 22767	11500 25358	12650 27893	13850 30539	14425 31807	15000 33075	16150 35611	16750 36934	

	Machine - Use	bar / psi	2 / 29	2.5 / 36	3 / 44	3.5 / 51	4 / 58	4.5 / 65	5 / 73	5.5 / 80	6 / 87	6.5 / 94
XLD D2 A*L5T XMINE D2 L5R XSM D2+ L5S	Loader	Front tip.load	18350 40462	20600 45423	22800 50274	25050 55235	27300 60197	30150 66481	33050 72875	35300 77837		
		Front laden	13100 28886	14700 32414	16300 35942	17900 39470	19500 42998	21550 47518	23600 52038	25200 55566		
		Rear unladen	10500 23153	11750 25909	13050 28775	14350 31642	15600 34398	17250 38036	18900 41675	21150 46636		
XK A **L3 XMINE D2 **L5 XSM D2+ **L5S	Loader	Front tip.load			18480 40748	21000 46305	23100 50936	25200 55566	27300 60197	28840 63592	31360 69149	33040 72853
		Front laden			13200 29106	15000 33075	16500 36383	18000 39690	19500 42998	20600 45423	22400 49392	23600 52038
		Rear unladen			10560 23285	12000 26460	13200 29106	14400 31752	15600 34398	16480 36338	17920 39514	18880 41630
XMINE D2 L5R	Underground Tansport Machine	Front and Rear			11800 26019	13200 29106	14500 31973	16000 35280	17000 37485	18500 40793		
XK A **L3 XMINE D2 **L5	Underground Tansport Machine	Front and Rear			11800 26019	13200 29106	14500 31973	16000 35280	17000 37485	18500 40793	19500 42998	20600 45423

	Machine - Use	bar / psi	2 / 29	2.5 / 36	3 / 44	3.5 / 51	4 / 58	4.5 / 65	5 / 73	5.25 / 76		
XLD D2 A*L5T	Graders	Front and Rear	7850 17309	8800 19404	9800 21609	10900 24035	12150 26791	13200 29106	14500 31973	15000 33075		

	Machine - Use	bar / psi	3 / 44	4 / 58	4.5 / 65	5 / 73	5.5 / 80	6 / 87	6.5 / 94	7 / 102	7.5 / 109	8 / 116
XTXL ****E4	Underground Tansport Machine	Front and Rear	11800 26019	14500 31973	16000 35280	17000 37485	18500 40793	19500 42998	20600 45423	21800 48069	23000 50715	24300 53582

	Machine - Use	bar / psi	2 / 29	2.5 / 36	3 / 44	3.5 / 51	4 / 58					
XAD 65-1 **SUPER E3T	Articulated dumpers	Standard	6900 15215	8100 17861	9350 20617	10700 23594	12150 26791					

CHARACTERISTICS OF MICHELIN EARTHMOVER TYRES

COMMERCIAL DESCRIPTION Types CAI (Part Number)	Max. dist./ hour km Miles	TKPH TMPH (1)	DIMENSIONAL CHARACTERISTICS (2) Michelin dimensions e mm inches	D mm inches	R' mm inches	RC mm inches	Tread depth mm 32rd	Entraxe mm inches	Cap. l galon	Measuring Rim Approved Rims (3) - (4)	Tubeless Seal CAI (4)	Tube Type Ref. Flap (4)
29"												
800/65 R 29 Tubeless												
MICHELIN XLD 65 L3T * 123059	16 9.9		793 31.2	1818 71.6	790 31.1	5412 213.1	48 60.5		1093 289	24.00/3.5 27.00/3.0	OR 3-29 553202	
33.25 R 29 Tubeless												
MICHELIN XTS E3T ** 871916	29 18	429 294	873 34.4	2068 81.4	923 36.3	6218 244.8	51 64.3		1640 433	27.00/3.5	OR 3-29 553202	29 YEAM1 19-29 (8)
875/65 R 29 Tubeless												
MICHELIN XAD 65-1 SUPER E3T ** 203B 086953	28 17.4	347 238	883 34.8	1881 74.1	822 32.4	5613 221	51 64.3		1376 364	27.00/3.0 27.00/3.5 28.00/3.5	OR 3-29 553202	
875/65 R 29 Tubeless												
MICHELIN XHA2 L3 * 214A2 936624	16 9.9		882 34.7	1870 73.6	797 31.4	5528 217.6	49 61.7		1354 358	27.00/3.0 27.00/3.5 28.00/3.5	OR 3-29 553202	
800/80 R 29 X-SUPER TERRAIN+ E4T TL ** 206B Tubeless												
MICHELIN X-SUPER TERRAIN+ E4 ** 206B 952451 (7)	22 13.7	300 206	805 31.7	2002 78.8	888 35	6005 236.4	67 84.4		1315 347	25.00/3.5 27.00/3.5	OR 3-29 553202	
33"												
18.00 R 33 Tubeless												
MICHELIN XV C E2 ** 271325 (9)	50 31.1	436 299	496 19.5	1820 71.7	822 32.4	5486 216	26 32.8	624 24.6	640 169	13.00/2.5	OR 3-33 553203	
MICHELIN X-HAUL E4P ** 205207	30 18.6	262 179	495 19.5	1860 73.2	856 33.7	5657 222.7	49 61.7		605 160			
MICHELIN XDT A4 E4T ** 123723	18 11.2	157 108	494 19.4	1868 73.5	885 34.8	5745 226.2	54 68					
MICHELIN XDT B E4T ** 123733	30 18.6	262 179										
MICHELIN X-QUARRY S E4R ** 873291	19 11.8	166 114	511 20.1	1864 73.4	867 34.1	5693 224.1	62 78.1		600 159			
MICHELIN X-TRACTION E4T ** 397431	25 15.5	218 149	493 19.4	1868 73.5	848 33.4	5652 222.5			661 175			
21.00 R 33 Tubeless												
MICHELIN X-HAUL S E4P ** 612785	25 15.5	280 192	550 21.7	1966 77.4	895 35.2	5955 234.4	53 66.8	697 27.4	820 217	15.00/3.0	OR 3-33 553203	33 VFAM 16-33 (8)
MICHELIN X-TRACTION E4T ** 067981			572 22.5	2007 79	907 35.7	6064 238.7	71 89.4		851 225			

CHARACTERISTICS OF MICHELIN EARTHMOVER TYRES

Tread type	Identification code (11)	Explanations on how to choose the tyre and to determine the inflation pressures Refer to explanations and methods allowing to determine the inflation pressure (10)

29"

	Machine - Use	bar / psi	2 / 29	2.5 / 36	3 / 44	3.5 / 51	4 / 58	4.25 / 62	4.5 / 65	5 / 73	5.5 / 80	
XLD 65 * L3T	Loaders	Front tip.load	14150 / 31201	16500 / 36383	18900 / 41675	21300 / 46967	23650 / 52148	24500 / 54023	26050 / 57440	28400 / 62622	30800 / 67914	
		Front laden	10100 / 22271	11800 / 26019	13500 / 29768	15200 / 33516	16900 / 37265	17500 / 38588	18600 / 41013	20300 / 44762	22000 / 48510	
		Rear unladen	8100 / 17861	9450 / 20837	10800 / 23814	12150 / 26791	13500 / 29768	14000 / 30870	14900 / 32855	16250 / 35831	17600 / 38808	

	Machine - Use	bar / psi	2 / 29	2.5 / 36	3 / 44	3.5 / 51	4 / 58	4.25 / 62	4.5 / 65	5 / 73	5.5 / 80	6 / 87
XTS ** E3T	Transport	Standard	9500 / 20948	11000 / 24255	12500 / 27563	14000 / 30870	15500 / 34178	16300 / 35942	17000 / 37485	18500 / 40793	19250 / 42446	20000 / 44100

	Machine - Use	bar / psi	2 / 29	2.5 / 36	3 / 44	3.5 / 51	4 / 58
XAD 65-1 ** SUPER E3T	Articulated dumpers	Standard	9100 / 20066	10800 / 23814	12500 / 27563	14100 / 31091	15500 / 34178

	Machine - Use	bar / psi	2 / 29	2.5 / 36	3 / 44	3.5 / 51	4 / 58	4.25 / 62	4.5 / 65	4.75 / 69
XHA2 * L3	Loaders	Front tip.load	12600 / 27783	15750 / 34729	18900 / 41675	22050 / 48620	25200 / 55566	26556 / 58556	28118 / 62000	29680 / 65444
		Front laden	9000 / 19845	11250 / 24806	13500 / 29768	15750 / 34729	18000 / 39690	18968 / 41824	20084 / 44285	21200 / 46746
		Rear unladen	7200 / 15876	9000 / 19845	10800 / 23814	12600 / 27783	14400 / 31752	15175 / 33461	16067 / 35428	16960 / 37397

	Machine - Use	bar / psi	3 / 44	3.25 / 47	3.5 / 51	3.74 / 54	4 / 58	4.25 / 62	4.5 / 65	4.75 / 69	5 / 73	5.25 / 76
X-SUPER TERRAIN+ ** E4	Articulated dumpers	Standard	12500 / 27563	13200 / 29106	14000 / 30870	14700 / 32414	15500 / 34178	16300 / 35942	17000 / 37485	17800 / 39249	18500 / 40793	19000 / 41895

33"

	Machine - Use	bar / psi	4 / 58	4.5 / 65	5 / 73	5.5 / 80	6 / 87	6.5 / 94	7 / 102	7.5 / 109
XV C ** E2 X-HAUL ** E4P XDT A4 ** E4T XDT B ** E4T X-QUARRY S ** E4R X-TRACTION ** E4T	Transport	Standard	7950 / 17530	8700 / 19184	9400 / 20727	10150 / 22381	10900 / 24035	11270 / 24850	11650 / 25688	12000 / 26460

	Machine - Use	bar / psi	4 / 58	4.5 / 65	5 / 73	5.5 / 80	6 / 87	6.5 / 94	7 / 102
X-HAUL S ** E4P X-TRACTION ** E4T	Transport	Standard	9315 / 20540	10250 / 22601	11185 / 24663	12125 / 26736	13065 / 28808	14000 / 30870	14470 / 31906

CHARACTERISTICS OF MICHELIN EARTHMOVER TYRES

COMMERCIAL DESCRIPTION Types CAI (Part Number)	Max. dist./ hour km Miles	TKPH TMPH (1)	DIMENSIONAL CHARACTERISTICS (2) Michelin dimensions e mm inches	D mm inches	R' mm inches	RC mm inches	Tread depth mm 32rd	Entraxe mm inches	Cap. l galon	Measuring Rim Approved Rims (3) - (4)	Tubeless Seal CAI (4)	Tube Type Ref. Flap (4)
33"												
35/65 R 33 Tubeless												
MICHELIN XR DN A L3 * 283500 (9)	16 9.9		911 35.9	2010 79.1	877 34.5	5993 235.9	38 47.9		1555 411	28.00/3.5	OR 3-33 553203	
MICHELIN XSM DN L3S 123052	10 6.2		918 36.1	2012 79.2	899 35.4	6052 238.3	44 55.4		1550 410			
MICHELIN XLD D1 A L4R ** 143231	14 8.7		923 36.3	2056 80.9		6135 241.5	60 75.6					
MICHELIN XLD D2 L5 ** 592188	10 6.2		926 36.5	2060 81.1	902 35.5	6150 242.1	97 122.2		1457 385			
MICHELIN XSM D2+ L5S ** 980846	4 2.5		921 36.3	2050 80.7	916 36.1	6166 242.8			1350 357			
MICHELIN XSM D2+ L5S 123529 (8)					917 36.1	6169 242.9						
35/65 R 33 X MINE D2 L5 TL ** Tubeless												
MICHELIN XMINE D2 L5 ** 944666	6 3.7		921 36.3	2051 80.7	916 36.1	6169 242.9	93 117.2		1338 353	28.00/3.5	OR 3-33 553203	
35/65 R 33 Tubeless												
MICHELIN XTXL E4 **** L4 *** 229A2 845075	14 8.7 if load per tyre ≤ 28.0 t 10 6.2 if load per tyre > 28.0 t	250 171	907 35.7	2026 79.8	887 34.9	6048 238.1	60 75.6		1474 389	28.00/3.5	OR 3-33 553203	
MICHELIN XTXL E4 **** 970355					893 35.2	6063 238.7			1546 408			
MICHELIN XTXL S E4 **** 771025 (9)		320 219										
35"												
21.00 R 35 Tubeless												
MICHELIN XDT A4 E4T ** 123921	18 11.2	209 143	576 22.7	2062 81.2	937 36.9	6242 245.7	61 76.9		900 238	15.00/3.0 17.00/3.0	OR 3-35 553204	
MICHELIN XDT B E4T ** 123881	30 18.6	348 238										
MICHELIN X-QUARRY S E4R ** 765959	19 11.8	220 151	599 23.6	2068 81.4	934 36.8	6245 245.9	67 84.4	703 27.7	952 252			

CHARACTERISTICS OF MICHELIN EARTHMOVER TYRES

Tread type	Identification code (11)	Explanations on how to choose the tyre and to determine the inflation pressures Refer to explanations and methods allowing to determine the inflation pressure (10)

33"

	Machine - Use	bar / psi	2 / 29	2.5 / 36	3 / 44	3.5 / 51	4 / 58	4.5 / 65	5 / 73	5.5 / 80	6 / 87	6.5 / 94
XR DN A * L3 XSM DN L3S XSM D2+ L5S	Loader	Front laden	13750 30319	14850 32744	16100 35501	17700 39029	19000 41895	21200 46746	23000 50715	24150 53251	25300 55787	
		Rear unladen	10990 24233	11870 26173	12870 28378	14170 31245	15200 33516	16950 37375	18400 40572	19300 42557	20250 44651	
XLD D1 A ** L4R XLD D2 ** L5 XSM D2+ ** L5S	Loader	Front laden			16100 35501	17700 39029	19000 41895	21200 46746	23000 50715	24300 53582	25750 56779	28000 61740
		Rear unladen			12900 28445	14200 31311	15200 33516	16950 37375	18400 40572	19450 42887	20600 45423	22400 49392
XSM DN L3S	Underground Tansport Machine	Front and Rear			13600 29988	15500 34178	17000 37485	18500 40793	20000 44100	21800 48069	23000 50715	
XLD D1 A ** L4R XLD D2 ** L5	Underground Tansport Machine	Front and Rear			13600 29988	15500 34178	17000 37485	18500 40793	20000 44100	21800 48069	23000 50715	24300 53582

	Machine - Use	bar / psi	3 / 44	3.5 / 51	4 / 58	4.5 / 65	5 / 73	5.5 / 80	6 / 87	6.5 / 94		
XMINE D2 ** L5	Loader	Front laden	16100 35501	17700 39029	19000 41895	21200 46746	23000 50715	24300 53582	25750 56779	28000 61740		
		Rear unladen	12900 28445	14200 31311	15200 33516	16950 37375	18400 40572	19450 42887	20600 45423	22400 49392		
XMINE D2 ** L5	Underground Tansport Machine	Front and Rear	13600 29988	15500 34178	17000 37485	18500 40793	20000 44100	21800 48069	23000 50715	24300 53582		

	Machine - Use	bar / psi	3 / 44	4 / 58	4.5 / 65	5 / 73	5.5 / 80	6 / 87	6.5 / 94	7 / 102	7.5 / 109	8 / 116
XTXL E4 **** L4 ***	Loader load per tyre ≤ 28 t	Front laden	16100 35501	19000 41895	21200 46746	23000 50715	24300 53582	25750 56779	28000 61740			
		Rear unladen	12900 28445	15200 33516	16950 37375	18400 40572	19450 42887	20600 45423	22400 49392			
XTXL E4 **** L4 ***	Loader load per tyre > 28 t	Front laden								30000 66150	31500 69458	32500 71663
		Rear unladen								24000 52920	25200 55566	26000 57330
XTXL E4 **** L4 *** XTXL **** E4 XTXL S **** E4	Underground Tansport Machine	Front and Rear				20000 44100	21200 46746	23000 50715	24300 53582	25750 56779	27250 60086	29000 63945

35"

	Machine - Use	bar / psi	4.5 / 65	5 / 73	5.5 / 80	6 / 87	6.5 / 94	7 / 102				
XDT A4 ** E4T XDT B ** E4T X-QUARRY S ** E4R	Transport	Standard	11450 25247	12450 27452	13500 29768	14500 31973	15000 33075	15500 34178				

CHARACTERISTICS OF MICHELIN EARTHMOVER TYRES

COMMERCIAL DESCRIPTION Types CAI (Part Number)	Max. dist./ hour km Miles	TKPH TMPH (1)	DIMENSIONAL CHARACTERISTICS (2) Michelin dimensions e mm inches	D mm inches	R' mm inches	RC mm inches	Tread depth mm 32rd	Entraxe mm inches	Cap. l galon	Measuring Rim Approved Rims (3) - (4)	Tubeless Seal CAI (4)	Tube Type Ref. Flap (4)
35"												
24.00 R 35 Tubeless												
MICHELIN XV C E2 ** 271650 (9)	50 31.1	740 507	668 26.3	2118 83.4	947 37.3	6372 250.9	30 37.8	825 32.5	1264 334	15.00/3.5 17.00/3.5	OR 3-35 553204	33/35 YEAM 16-35 (8)
MICHELIN X-HAUL E4P ** 087693	24 14.9	355 243	645 25.4	2155 84.8	995 39.2	6562 258.3	60 75.6		1150 304			
MICHELIN XDT B E4T ** 123931	30 18.6	444 304	652 25.7	2162 85.1	978 38.5	6533 257.2	68 85.7					
MICHELIN XDT A E4T ** 123941	22 13.7	326 223										
MICHELIN XDT A4 E4T ** 123951	18 11.2	266 182										
MICHELIN X-QUARRY S E4R ** 412539	19 11.8	281 192	659 25.9	2156 84.9	976 38.4	6517 256.6	70 88.2		1157 306			
24.00 R 35 Tubeless												
MICHELIN X-TRACTION SC E4T ** 622698	22 13.7	326 223	676 26.6	2187 86.1	982 38.7	6592 259.5	77 97	825 32.5	1223 323	15.00/3.5 17.00/3.5	OR 3-35 553204	33/35 YEAM 16-35 (8)
29.5 R 35 Tubeless												
MICHELIN XTS E3T ** 631225	29 18	371 254	777 30.6	2116 83.3	943 37.1	6539 257.4	45 56.7		1494 395	25.00/3.5 27.00/3.5	OR 3-35 553204	33/35 YEAM 20-35 (8)
37.25 R 35 Tubeless												
MICHELIN XRS B E4R ** 123673	22 13.7	415 284	947 37.3	2364 93.1	1063 41.9	7127 280.6	53 66.8		2250 594	29.00/3.5 31.00/4.0	OR 3-35 553204	33/35 YEAM 20-35 (8)
MICHELIN XTS E3T ** 540244	29 18	540 370	956 37.6	2370 93.3	1070 42.1	7157 281.8	59 74.3		2400 634			
39"												
37.5 R 39 Tubeless												
MICHELIN XRS E4R ** 856011	22 13.7	453 310	976 38.4	2517 99.1	1130 44.5	7583 298.5	56 70.6		2624 693	32.00/4.5	OR 3-39 553206	
40.5/75 R 39 Tubeless												
MICHELIN XMS B E3R ** 379296	33 20.5	766 525	998 39.3	2588 101.9	1151 45.3	7770 305.9	51 64.3		2940 777	32.00/4.5	OR 3-39 553206	
45/65 R 39 Tubeless												
MICHELIN XLD D2 L5 ** 242A2 519947	10 6.2		1102 43.4	2580 101.6	1116 43.9	7668 301.9	115 144.9		2760 729	32.00/4.5 36.00/4.5	OR 3-39 553206	
MICHELIN XLD D2 A L5T * 123681 (8)				2577 101.5	1086 42.8	7586 298.7						
MICHELIN XMINE D2 L5 ** 242A2 785703	6 3.7		1099 43.3	2583 101.7	1132 44.6	7715 303.7	116 146.1		2712 717			
MICHELIN XMINE D2 L5R * 123305 (8)				2580 101.6	1110 43.7	7653 301.3						

CHARACTERISTICS OF MICHELIN EARTHMOVER TYRES

Tread type	Identification code (11)	Explanations on how to choose the tyre and to determine the inflation pressures Refer to explanations and methods allowing to determine the inflation pressure (10)

35"

	Machine - Use	bar / psi	4.5 / 65	5 / 73	5.5 / 80	6 / 87	6.5 / 94	7 / 102	7.5 / 109	8 / 116		
XV C ** E2 X-HAUL ** E4P XDT B ** E4T XDT A ** E4T XDT A4 ** E4T X-QUARRY S ** E4R	Transport	Standard	13950 30760	15050 33185	16300 35942	17350 38257	18500 40793	19050 42005	19625 43273	20200 44541		

	Machine - Use	bar / psi	4.5 / 65	5 / 73	5.5 / 80	6 / 87	6.5 / 94	7 / 102				
X-TRACTION SC ** E4T	Transport	Standard	13950 30760	15050 33185	16300 35942	17350 38257	18500 40793	19050 42005				

	Machine - Use	bar / psi	3.5 / 51	3.75 / 54	4 / 58	4.25 / 62	4.5 / 65	5 / 73	5.5 / 80			
XTS ** E3T	Transport	Standard	13200 29106	13900 30650	14600 32193	15300 33737	16000 35280	17400 38367	18100 39911			

	Machine - Use	bar / psi	3.75 / 54	4 / 58	4.25 / 62	4.5 / 65	5 / 73	5.5 / 80	6 / 87	6.5 / 94		
XRS B ** E4R XTS ** E3T	Transport	Standard	17950 39580	18500 40793	19350 42667	20200 44541	21900 48290	23600 52038	24450 53912	25300 55787		

39"

	Machine - Use	bar / psi	3 / 44	3.5 / 51	4 / 58	4.25 / 62	4.5 / 65	5 / 73	5.5 / 80	6 / 87		
XRS ** E4R	Transport	Standard	18100 39911	20000 44100	21900 48290	22900 50495	23850 52589	25750 56779	26700 58874	27650 60968		

	Machine - Use	bar / psi	3 / 44	3.5 / 51	4 / 58	4.25 / 62	4.5 / 65	5 / 73	5.5 / 80	6 / 87		
XMS B ** E3R	Transport	Standard	20200 44541	22400 49392	24600 54243	25700 56669	26800 59094	29000 63945	30100 66371	31200 68796		

	Machine - Use	bar / psi	3 / 44	3.5 / 51	4 / 58	4.5 / 65	5 / 73	5.5 / 80	6 / 87	6.5 / 94		
XLD D2 A * L5T XMINE D2 * L5R	Loader	Front laden	26500 58433	30000 66150	33500 73868	36500 80483	40000 88200	42500 93713	45000 99225			
		Rear unladen	21200 46746	24000 52920	26800 59094	29200 64386	32000 70560	34000 74970	36000 79380			
XLD D2 ** L5 XMINE D2 ** L5	Loader	Front laden	26500 58433	30000 66150	33500 73868	36500 80483	40000 88200	42500 93713	45000 99225	47500 104738		
		Rear unladen	21200 46746	24000 52920	26800 59094	29200 64386	32000 70560	34000 74970	36000 79380	38000 83790		

CHARACTERISTICS OF MICHELIN EARTHMOVER TYRES

COMMERCIAL DESCRIPTION Types CAI (Part Number)	Max. dist./ hour km Miles	TKPH TMPH (1)	DIMENSIONAL CHARACTERISTICS (2) Michelin dimensions e mm inches	D mm inches	R' mm inches	RC mm inches	Tread depth mm 32rd	Entraxe mm inches	Cap. l galon	Measuring Rim Approved Rims (3) - (4)	Tubeless Seal CAI (4)	Tube Type Ref. Flap (4)
45"												
45/65 R 45 Tubeless												
MICHELIN XLD D1 L4 ** 244A2 733149	14 8.7		1130 44.5	2703 106.4	1180 46.5	8062 317.4	71 89.4		3330 880	36.00/4.5	OR 3-45 553214	
MICHELIN XLD D2 L5 ** 244A2 871341	10 6.2		1147 45.2				115 144.9		3020 798			
MICHELIN XMINE D2 L5 ** 244A2 651716	6 3.7		1159 45.6	2699 106.3	1193 47	8087 318.4	116 146.1					
MICHELIN XMINE D2 L5R * 123315 (8)				2697 106.2	1189 46.8	8073 317.8						
49"												
24.00 R 49 Tubeless												
MICHELIN XDR B E4R ** 123235	26 16.2	453 310	662 26.1	2529 99.6	1147 45.2	7651 301.2	67 84.4	806 31.7	1466 387	17.00/3.5	OR 3-49 553205	
MICHELIN XDR B4 E4R ** 123115	22 13.7	384 263										
27.00 R 49 Tubeless												
MICHELIN XV C E2 ** 280557 (9)	50 31.1	1090 747	745 29.3	2648 104.3	1170 46.1	7934 312.4	33 41.6	909 35.8	2060 544	19.50/4.0 [2.7] **19.50/4.0 [3.2]**	OR 3-49 553205	
MICHELIN XDT B E4T ** 123783	30 18.6	654 448		2696 106.1	1207 47.5	8115 319.5	74 93.2		2019 533			
MICHELIN XDT A4 E4T ** 123773 (8, 9)	18 11.2	392 269										
MICHELIN X-TRACTION RD B E4T ** 470320	30 18.6	654 448	743 29.3	2737 107.8	1234 48.6	8262 325.3	81 102		2045 540			
MICHELIN X-TRACTION RD B4 E4T ** 166905	26 16.2	567 388										
MICHELIN X-TRACTION RD A4 E4T ** 495676	18 11.2	392 269										
MICHELIN X-TRACTION S RD B E3T ** 689287	35 21.7	763 523	746 29.4	2647 104.2	1190 46.9	7982 314.3	46 58					
MICHELIN XDR B4 E4R ** 123210 (8)	22 13.7	480 329	740 29.1	2712 106.8	1224 48.2	8188 322.4	76 95.7		2033 537			
MICHELIN XDR A E4R ** 123170 (8)	18 11.2	392 269										
MICHELIN XDR2 B E4R ** 162292	26 16.2	567 388	738 29.1	2733 107.6	1235 48.6	8257 325.1	90 113.4		1995 527			
MICHELIN XDR2 B4 E4R ** 642068	22 13.7	480 329										
MICHELIN XDR2 A E4R ** 831573	18 11.2	392 269										
51"												
30.00 R 51 Tubeless												
MICHELIN XDR B E4R ** 123151	24 14.9	643 440	835 32.9	2878 113.3	1288 50.7	8662 341	83 104.6	1006 39.6	2490 658	22.00/4.5	OR 4-51 553210	
MICHELIN XDR B4 E4R ** 123041	20 12.4	536 367										

CHARACTERISTICS OF MICHELIN EARTHMOVER TYRES

Tread type	Identification code (11)	Explanations on how to choose the tyre and to determine the inflation pressures Refer to explanations and methods allowing to determine the inflation pressure (10)

45"

	Machine - Use	bar / psi	4 / 58	4.5 / 65	5 / 73	5.5 / 80	6 / 87	6.5 / 94				
XMINE D2 * L5R	Loader	Front laden	35500 78278	38750 85444	42500 93713	44600 98343	46750 103084					
		Rear unladen	28400 62622	31000 68355	34000 74970	35680 78674	37400 82467					
XLD D1 ** L4 XLD D2 ** L5 XMINE D2 ** L5	Loader	Front laden	35500 78278	38750 85444	42500 93713	45000 99225	47500 104738	51500 113558				
		Rear unladen	28400 62622	31000 68355	34000 74970	36000 79380	38000 83790	41200 90846				

49"

	Machine - Use	bar / psi	3.5 / 51	4 / 58	4.5 / 65	5 / 73	5.5 / 80	6 / 87	6.5 / 94	7 / 102	7.5 / 109	8 / 116
XDR B ** E4R XDR B4 ** E4R	Transport	Standard	13900 30650	15250 33626	16550 36493	17850 39359	19200 42336	20500 45203	21800 48069	22450 49502	23100 50936	23350 51487

	Machine - Use	bar / psi	3.5 / 51	4 / 58	4.5 / 65	5 / 73	5.5 / 80	6 / 87	6.5 / 94	7 / 102	7.5 / 109	8 / 116
XV C ** E2 XDT B ** E4T XDT A4 ** E4T X-TRACTION RD B ** E4T X-TRACTION RD B4 ** E4T X-TRACTION RD A4 ** E4T X-TRACTION S RD B ** E3T XDR B4 ** E4R XDR A ** E4R XDR2 B ** E4R XDR2 B4 ** E4R XDR2 A ** E4R	Transport	Standard	16850 37154	18550 40903	20300 44762	22050 48620	24000 52920	25500 56228	27250 60086	28100 61961	29000 63945	29850 65819

51"

	Machine - Use	bar / psi	3.5 / 51	4 / 58	4.5 / 65	5 / 73	5.5 / 80	6 / 87	6.5 / 94	7 / 102		
XDR B ** E4R XDR B4 ** E4R	Transport	Standard	22100 48731	24350 53692	26650 58763	28950 63835	31200 68796	33500 73868	34650 76403	35800 78939		

CHARACTERISTICS OF MICHELIN EARTHMOVER TYRES

COMMERCIAL DESCRIPTION Types CAI (Part Number)	Max. dist./ hour km Miles	TKPH TMPH (1)	DIMENSIONAL CHARACTERISTICS (2) Michelin dimensions e mm inches	D mm inches	R' mm inches	RC mm inches	Tread depth mm 32rd	Entraxe mm inches	Cap. l galon	Measuring Rim Approved Rims (3) - (4)	Tubeless Seal CAI (4)	Tube Type Ref. Flap (4)
51"												
33.00 R 51 Tubeless												
MICHELIN XDC C4 E3V ** 645788 (9)	45 28	1395 956	889 35	2966 116.8	1318 51.9	8903 350.5	48 60.5	1107 43.6		24.00/5.0 [3.9] **24.00/5.0 [4.4]**	OR 4-51 553210	.....
MICHELIN XDC B4 E3V ** 139019 (8, 9)	34 21.1	1054 722										
MICHELIN XDT B E4T ** 123961	30 18.6	930 637	911 35.9	3040 119.7	1365 53.7	9161 360.7	87 109.6		3090 816			
MICHELIN XDT A E4T ** 123971	22 13.7	682 467										
MICHELIN XDR C4 E4R ** 839917 (8)	27 16.8	837 573	907 35.7	3032 119.4	1353 53.3	9116 358.9	88 110.9		3000 793			
MICHELIN XDR B E4R ** 123411 (8)	24 14.9	744 510										
MICHELIN XDR B4 E4R ** 123281 (8)	20 12.4	620 425										
MICHELIN XDR A E4R ** 123161 (8)	16 9.9	496 340										
MICHELIN XDR2 C4 E4R ** 103564	27 16.8	837 573	916 36.1	3047 120	1365 53.7	9175 361.2	94 118.4		3119 824			
MICHELIN XDR2 B E4R ** 242131	24 14.9	744 510										
MICHELIN XDR2 B4 E4R ** 444886	20 12.4	620 425										
MICHELIN XDR2 MB4 E4R ** 392537												
36.00 R 51 Tubeless												
MICHELIN XDC B E3V ** 320300 (9)	37 23	1369 938	1008 39.7	3145 123.8	1376 54.2	9388 369.6	57 71.8	1225 48.2	3980 1052	26.00/5.0	OR 4-51 553210	.....
MICHELIN XDC C4 E3V ** 975610 (9)	40 24.9	1480 1014										
MICHELIN XDR B E4R ** 123122	24 14.9	888 608	1011 39.8	3215 126.6	1430 56.3	9653 380	96 120.9					
MICHELIN XDR B4 E4R ** 123002	20 12.4	740 507										

CHARACTERISTICS OF MICHELIN EARTHMOVER TYRES

Tread type	Identification code (11)	Explanations on how to choose the tyre and to determine the inflation pressures Refer to explanations and methods allowing to determine the inflation pressure (10)

51"

	Machine - Use	bar *psi*	3.5 *51*	4 *58*	4.5 *65*	5 *73*	5.5 *80*	6 *87*	6.5 *94*	7 *102*		
XDC C4 ** E3V ***XDC B4 ** E3V*** ***XDT B ** E4T*** ***XDT A ** E4T*** ***XDR C4 ** E4R*** ***XDR B ** E4R*** ***XDR B4 ** E4R*** ***XDR A ** E4R*** ***XDR2 C4 ** E4R*** ***XDR2 B ** E4R*** ***XDR2 B4 ** E4R*** ***XDR2 MB4 ** E4R***	**Transport**	Standard	**25550** *56338*	**28200** *62181*	**30800** *67914*	**33450** *73757*	**36600** *80703*	**38750** *85444*	**40100** *88421*	**41400** *91287*		

	Machine - Use	bar *psi*	3.5 *51*	4 *58*	4.5 *65*	5 *73*	5.5 *80*	6 *87*	6.5 *94*	7 *102*	7.5 *109*	
XDC B ** E3V ***XDC C4 ** E3V*** ***XDR B ** E4R*** ***XDR B4 ** E4R***	**Transport**	Standard	**30450** *67142*	**33600** *74088*	**36800** *81144*	**39950** *88090*	**43100** *95036*	**46250** *101981*	**47850** *105509*	**49400** *108927*	**51000** *112455*	

CHARACTERISTICS OF MICHELIN EARTHMOVER TYRES

COMMERCIAL DESCRIPTION Types CAI (Part Number)	Max. dist./ hour km Miles	TKPH TMPH (1)	DIMENSIONAL CHARACTERISTICS (2) Michelin dimensions e mm inches	D mm inches	R' mm inches	RC mm inches	Tread depth mm 32rd	Entraxe mm inches	Cap. l galon	Measuring Rim Approved Rims (3) - (4)	Tubeless Seal CAI (4)	Tube Type Ref. Flap (4)
51"												
50/65 R 51 Tubeless												
MICHELIN XMINE D2 HR L5R ** 523260	6 3.7		1273 50.1	3073 121	1366 53.8	9227 363.3	116 146.1		4463 1179	40.00/4.5	OR 4-51 553210	.....
MICHELIN XMINE D2 SR L5R ** 970863												
MICHELIN XMINE D2 LC L5R ** 508706 (7)	10 6.2											
57"												
37.00 R 57 Tubeless												
MICHELIN XDM B4 E4T ** 725325	20 12.4	848 581	1022 40.2	3453 135.9	1542 60.7	10385 408.9	99 124.7	1242 48.9		27.00/6.0 [5.2] 27.00/6.0 [4.6] 29.00/6.0	OR 4-57 553211	.....
MICHELIN XDR C E4R ** 396514 (8)	30 18.6	1272 871	1019 40.1	3456 136.1	1531 60.3	10362 408	98 123.5		4586 1212			
MICHELIN XDR C4 E4R ** 123073 (8)	27 16.8	1145 784										
MICHELIN XDR B E4R ** 123482 (8)	24 14.9	1018 697										
MICHELIN XDR B4 E4R ** 123362 (8)	20 12.4	848 581										
MICHELIN XDR2 C E4R ** 422260	30 18.6	1272 871	1025 40.4	3454 136	1533 60.4	10363 408	102 128.5		4553 1203			
MICHELIN XDR2 C4 E4R ** 532711	27 16.8	1145 784										
MICHELIN XDR2 B E4R ** 183539	24 14.9	1018 697										
MICHELIN XDR2 B4 E4R ** 289227	20 12.4	848 581										
MICHELIN XDR2 MB4 E4R ** 196602												

CHARACTERISTICS OF MICHELIN EARTHMOVER TYRES

Tread type	Identification code (11)	Explanations on how to choose the tyre and to determine the inflation pressures Refer to explanations and methods allowing to determine the inflation pressure (10)											

51"

	Machine - Use	bar / psi	4 / 58	4.5 / 65	5 / 73	5.5 / 80	6 / 87	6.35 / 92				
XMINE D2 HR ** L5R XMINE D2 SR ** L5R XMINE D2 LC ** L5R	Loaders	Front laden	46500 102533	50500 111353	54500 120173	58500 128993	62500 137813	65000 143325				
		Rear unladen	37200 82026	40400 89082	43600 96138	46800 103194	50000 110250	52000 114660				

57"

	Machine - Use	bar / psi	4 / 58	4.5 / 65	5 / 73	5.5 / 80	6 / 87	6.5 / 94	7 / 102	7.5 / 109		
XDM B4 ** E4T XDR C ** E4R XDR C4 ** E4R XDR B ** E4R XDR B4 ** E4R XDR2 C ** E4R XDR2 C4 ** E4R XDR2 B ** E4R XDR2 B4 ** E4R XDR2 MB4 ** E4R	Transport	Standard	38550 85003	42200 93051	45800 100989	49400 108927	53000 116865	54850 120944	56650 124913	58450 128882		

CHARACTERISTICS OF MICHELIN EARTHMOVER TYRES

COMMERCIAL DESCRIPTION Types CAI (Part Number)	Max. dist./ hour km Miles	TKPH TMPH (1)	DIMENSIONAL CHARACTERISTICS (2) Michelin dimensions e mm inches	D mm inches	R' mm inches	RC mm inches	Tread depth mm 32rd	Entraxe mm inches	Cap. l galon	Measuring Rim Approved Rims (3) - (4)	Tubeless Seal CAI (4)	Tube Type Ref. Flap (4)
57"												
40.00 R 57 Tubeless												
MICHELIN XDC C4 E3V ** 835698 (9)	40 24.9	1920 1315	1107 43.6	3491 137.4	1528 60.2	10422 410.3	63 79.4	1365 53.7	5628 1487	29.00/6.0 [5.7] 29.00/6.0 [5.2] 32.00/6.0	OR 4-57 553211	.....
MICHELIN XDC B E3V ** 731362	37 23	1776 1217										
MICHELIN XDC B4 E3V ** 943864 (9)	34 21.1	1632 1118										
MICHELIN XDR C E4R ** 765274 (8)	30 18.6	1440 986	1121 44.1	3570 140.6	1569 61.8	10673 420.2	97 122.2		5630 1487			
MICHELIN XDR C4 E4R ** 123443 (8)	27 16.8	1296 888										
MICHELIN XDR B E4R ** 123323 (8)	24 14.9	1152 789										
MICHELIN XDR B4 E4R ** 123193 (8)	20 12.4	960 658										
MICHELIN XDR+ C E4R ** 386170 (8)	30 18.6	1440 986										
MICHELIN XDR+ C4 E4R ** 812802 (8)	27 16.8	1296 888										
MICHELIN XDR+ B E4R ** 634799 (8)	24 14.9	1152 789										
MICHELIN XDR+ B4 E4R ** 345942 (8)	20 12.4	960 658										
MICHELIN XDR2 C E4R ** 973971	30 18.6	1440 986	1115 43.9	3579 140.9	1577 62.1	10711 421.7	98 123.5					
MICHELIN XDR2 C4 E4R ** 467633	27 16.8	1296 888										
MICHELIN XDR2 B E4R ** 815392	24 14.9	1152 789										
MICHELIN XDR2 B4 E4R ** 736514	20 12.4	960 658										
MICHELIN XDR2 MC4 E4R ** 139631 (9)	27 16.8	1296 888										
MICHELIN XDR2 MB4 E4R ** 064371 (9)	20 12.4	960 658										
50/80 R 57 Tubeless												
MICHELIN XDR C4 E4R ** 929814	24 14.9	1402 960	1284 50.6	3627 142.8	1567 61.7	10776 424.3	94 118.4	1563 61.5	6750 1783	34.00/6.0 [5.2] 34.00/6.0 [4.8]	OR 4-57 553211	.....
MICHELIN XDR B E4R ** 966177	22 13.7	1285 880										
MICHELIN XDR B4 E4R ** 310787	20 12.4	1168 800										

CHARACTERISTICS OF MICHELIN EARTHMOVER TYRES

Tread type	Identification code (11)	Explanations on how to choose the tyre and to determine the inflation pressures Refer to explanations and methods allowing to determine the inflation pressure (10)											

57"

	Machine - Use	bar / psi	4 / 58	4.5 / 65	5 / 73	5.5 / 80	6 / 87	6.5 / 94	7 / 102			
XDC C4 ** E3V XDC B ** E3V XDC B4 ** E3V XDR C ** E4R XDR C4 ** E4R XDR B ** E4R XDR B4 ** E4R XDR+ C ** E4R XDR+ C4 ** E4R XDR+ B ** E4R XDR+ B4 ** E4R XDR2 C ** E4R XDR2 C4 ** E4R XDR2 B ** E4R XDR2 B4 ** E4R XDR2 MC4 ** E4R XDR2 MB4 ** E4R	Transport	Standard	43650 96248	47750 105289	51850 114329	55950 123370	60000 132300	62050 136820	64100 141341			

	Machine - Use	bar / psi	5 / 73	5.5 / 80	6 / 87	6.5 / 94	7 / 102					
XDR C4 ** E4R XDR B ** E4R XDR B4 ** E4R	Transport	Standard	63000 138915	68000 149940	73000 160965	75500 166478	78000 171990					

CHARACTERISTICS OF MICHELIN EARTHMOVER TYRES

COMMERCIAL DESCRIPTION Types CAI (Part Number)	Max. dist./ hour km Miles	TKPH TMPH (1)	DIMENSIONAL CHARACTERISTICS (2) Michelin dimensions e mm inches	D mm inches	R' mm inches	RC mm inches	Tread depth mm 32rd	Entraxe mm inches	Cap. l galon	Measuring Rim Approved Rims (3) - (4)	Tubeless Seal CAI (4)	Tube Type Ref. Flap (4)
57"												
50/80 R 57 Tubeless												
MICHELIN XDR C4 E4R ** 929814	26 16.2	1394 955	1253 49.3	3625 142.7	1577 62.1	10798 425.1	94 118.4	1536 60.5	6420 1696	32.00/6.0 [4.8] **32.00/6.0 [5.2]** 34.00/6.0	OR 4-57 553211	.....
MICHELIN XDR B E4R ** 966177	24 14.9	1286 881										
MICHELIN XDR B4 E4R ** 310787	20 12.4	1072 734										
50/80 R 57 Tubeless												
MICHELIN XDR250 C E4R ** 195241	30 18.6	1608 1101	1204 47.4	3610 142.1	1586 62.4	10791 424.8	94 118.4	1420 55.9	6150 1625	29.00/6.0 [5.7] 29.00/6.0 [5.2] **32.00/6.0 [5.2]** 32.00/6.0 [4.8]	OR 4-57 553211	.....
MICHELIN XDR250 C4 E4R ** 253293	27 16.8	1447 991										
MICHELIN XDR250 B E4R ** 274589	24 14.9	1286 881										
MICHELIN XDR250 B4 E4R ** 371742	20 12.4	1072 734										
50/90 R 57 Tubeless												
MICHELIN XDR C4 E4R ** 388084	28 17.4	1747 1197	1260 49.6	3840 151.2	1701 67	11513 453.3	107 134.8	1537 60.5		**32.00/6.5**	OR 4-57 553211	.....
MICHELIN XDR B E4R ** 894079	24 14.9	1498 1026										
MICHELIN XDR B4 E4R ** 289603	20 12.4	1248 855										
55/80 R 57 Tubeless												
MICHELIN XMINE D2 LC L5R * 594400	10 6.2		1430 56.3	3740 147.2	1636 64.4	11161 439.4	119 149.9		7967 2105	42.00/5.0 **44.00/5.0**	OR 4-57 553211	.....
MICHELIN XMINE D2 SR L5R * 635563	6 3.7											
MICHELIN XMINE D2 HR L5R * 817367												
60/80 R 57 Tubeless												
MICHELIN XMINE D2 SR L5R * 964380	6 3.7		1520 59.8	3949 155.5	1713 67.4	11750 462.6	118 148.7		10022 2648	**47.00/5.0**	OR 4-57 553211	.....
MICHELIN XMINE D2 HR L5R * 114447												

CHARACTERISTICS OF MICHELIN EARTHMOVER TYRES

Tread type	Identification code (11)	Explanations on how to choose the tyre and to determine the inflation pressures Refer to explanations and methods allowing to determine the inflation pressure (10)

57"

	Machine - Use	bar / psi	5 / 73	5.5 / 80	6 / 87	6.5 / 94	7 / 102					
XDR C4 ** E4R **XDR B ** E4R** **XDR B4 ** E4R**	Transport	Standard	57820 *127493*	62410 *137614*	67000 *147735*	69290 *152784*	71590 *157856*					

	Machine - Use	bar / psi	5 / 73	5.5 / 80	6 / 87	6.5 / 94	7 / 102	7.5 / 109	8 / 116			
XDR250 C ** E4R **XDR250 C4 ** E4R** **XDR250 B ** E4R** **XDR250 B4 ** E4R**	Transport	Standard	55000 *121275*	59000 *130095*	63000 *138915*	67000 *147735*	69000 *152145*	71000 *156555*	73000 *160965*			

	Machine - Use	bar / psi	4 / 58	4.5 / 65	5 / 73	5.5 / 80	6 / 87	6.5 / 94	7 / 102	7.5 / 109		
XDR C4 ** E4R **XDR B ** E4R** **XDR B4 ** E4R**	Transport	Standard	52850 *116534*	57800 *127449*	62750 *138364*	67700 *149279*	72650 *160193*	75320 *166081*	78000 *171990*	80660 *177855*		

	Machine - Use	bar / psi	4 / 58	4.5 / 65	5 / 73	5.5 / 80	6 / 87	6.5 / 94	7 / 102			
XMINE D2 LC * L5R **XMINE D2 SR * L5R** **XMINE D2 HR * L5R**	Loaders	Front laden	75000 *165375*	80000 *176400*	85000 *187425*	90000 *198450*	95000 *209475*	100000 *220500*	105000 *231525*			
		Rear unladen	60000 *132300*	64000 *141120*	68000 *149940*	72000 *158760*	76000 *167580*	80000 *176400*	84000 *185220*			

	Machine - Use	bar / psi	4 / 58	4.5 / 65	5 / 73	5.5 / 80	6 / 87	6.5 / 94	7 / 102			
XMINE D2 SR * L5R **XMINE D2 HR * L5R**	Loaders	Front laden	75000 *165375*	83000 *183015*	91000 *200655*	99000 *218295*	107000 *235935*	115000 *253575*	123000 *271215*			
		Rear unladen	60000 *132300*	66400 *146412*	72800 *160524*	79200 *174636*	85600 *188748*	92000 *202860*	98400 *216972*			

CHARACTERISTICS OF MICHELIN EARTHMOVER TYRES

COMMERCIAL DESCRIPTION Types CAI (Part Number)	Max. dist./ hour km Miles	TKPH TMPH (1)	DIMENSIONAL CHARACTERISTICS (2) Michelin dimensions e mm inches	D mm inches	R' mm inches	RC mm inches	Tread depth mm 32rd	Entraxe mm inches	Cap. l galon	Measuring Rim Approved Rims (3) - (4)	Tubeless Seal CAI (4)	Tube Type Ref. Flap (4)
63"												
53/80 R 63 Tubeless												
MICHELIN XDR C4 E4R ** 632032 (8)	28 17.4	1837 1258										
MICHELIN XDR B E4R ** 026549 (8)	24 14.9	1574 1078	1342 52.8	3776 148.7	1638 64.5	11234 442.3	105 132.3		7650 2021			
MICHELIN XDR B4 E4R ** 881484 (8)	20 12.4	1312 899										
MICHELIN XDR2 C4 E4R ** 782508 (8)	28 17.4	1837 1258						1637 64.4		36.00/5.0 [5] **36.00/5.0 [5.5]**	OR 4-63 553056	
MICHELIN XDR2 B E4R ** 077134	24 14.9	1574 1078										
MICHELIN XDR2 B4 E4R ** 227848	20 12.4	1312 899	1360 53.5	3803 149.7	1652 65	11322 445.7	110 138.6		7625 2015			
MICHELIN XDR2 MC4 E4R ** 038101 (9)	28 17.4	1837 1258										
MICHELIN XDR2 MB4 E4R ** 820930 (9)	20 12.4	1312 899										
53/80 R 63 Tubeless												
MICHELIN XDR C4 E4R ** 632032 (8)	28 17.4	1837 1258							7650 2021			
MICHELIN XDR B E4R ** 026549 (8)	24 14.9	1574 1078	1362 53.6	3776 148.7	1638 64.5	11234 442.3	105 132.3		7845 2073			
MICHELIN XDR B4 E4R ** 881484 (8)	20 12.4	1312 899										
MICHELIN XDR2 C4 E4R ** 782508 (8)	28 17.4	1837 1258						1660 65.4		38.00/5.0 [5] **38.00/5.0 [5.5]**	OR 4-63 553056	
MICHELIN XDR2 B E4R ** 077134	24 14.9	1574 1078										
MICHELIN XDR2 B4 E4R ** 227848	20 12.4	1312 899	1380 54.3	3803 149.7	1655 65.2	11329 446	110 138.6		7822 2067			
MICHELIN XDR2 MC4 E4R ** 038101 (9)	28 17.4	1837 1258										
MICHELIN XDR2 MB4 E4R ** 820930 (9)	20 12.4	1312 899										

CHARACTERISTICS OF MICHELIN EARTHMOVER TYRES

Tread type	Identification code (11)	Explanations on how to choose the tyre and to determine the inflation pressures Refer to explanations and methods allowing to determine the inflation pressure (10)											

63"

	Machine - Use	bar	4	4.5	5	5.5	6	6.5	6.8	7		
		psi	58	65	73	80	87	94	99	102		
XDR C4 ** E4R XDR B ** E4R XDR B4 ** E4R XDR2 C4 ** E4R XDR2 B ** E4R XDR2 B4 ** E4R XDR2 MC4 ** E4R XDR2 MB4 ** E4R	Transport	Standard	59660 131550	65240 143854	70830 156180	76410 168484	82000 180810	84270 185815	85630 188814	86530 190799		

	Machine - Use	bar	4	4.5	5	5.5	6	6.5	6.8	7		
		psi	58	65	73	80	87	94	99	102		
XDR C4 ** E4R XDR B ** E4R XDR B4 ** E4R XDR2 C4 ** E4R XDR2 B ** E4R XDR2 B4 ** E4R XDR2 MC4 ** E4R XDR2 MB4 ** E4R	Transport	Standard	59660 131550	65240 143854	70830 156180	76410 168484	82000 180810	85010 187447	86820 191438	88030 194106		

CHARACTERISTICS OF MICHELIN EARTHMOVER TYRES

COMMERCIAL DESCRIPTION Types CAI (Part Number)	Max. dist./ hour km Miles	TKPH TMPH (1)	DIMENSIONAL CHARACTERISTICS (2) Michelin dimensions e mm inches	D mm inches	R' mm inches	RC mm inches	Tread depth mm 32rd	Entraxe mm inches	Cap. l galon	Measuring Rim Approved Rims (3) - (4)	Tubeless Seal CAI (4)	Tube Type Ref. Flap (4)
63"												
56/80 R 63 Tubeless												
MICHELIN XDR S C4 E3 ** 399372	36 22.4	2765 1894	1430 56.3	3997 157.4	1716 67.6	11848 466.5	59 74.3	1745 68.7	10094 2667	**41.00/5.0 [6.0]** 41.00/5.0 [5.5]	OR 4-63 553056	
MICHELIN XDR C4 E4R ** 282261	28 17.4	2150 1473	1425 56.1	3998 157.4	1727 68	11876 467.6	105 132.3		9547 2522			
MICHELIN XDR B E4R ** 819341	24 14.9	1843 1262										
MICHELIN XDR B4 E4R ** 380744	20 12.4	1536 1052										
MICHELIN XDR2 C4 E4R ** 509256 (8)	28 17.4	2150 1473	1421 55.9	4015 158.1	1735 68.3	11930 469.7	110 138.6		9404 2485			
MICHELIN XDR2 MC4 E4R ** 194258												
MICHELIN XDR2 B E4R ** 034330	24 14.9	1843 1262										
MICHELIN XDR2 B4 E4R ** 981620	20 12.4	1536 1052										
59/80 R 63 Tubeless												
MICHELIN XDR S C4 E3 ** 784092	32 19.9	2535 1736	1501 59.1	4028 158.6	1734 68.3	11951 470.5	71 89.4	1834 72.2	10600 2801	44.00/5.0 [5.5] **44.00/5.0 [6.0]**	OR 4-63 553056	
MICHELIN XDR S B E3 ** 364848	28 17.4	2218 1519										
MICHELIN XDR2 S C4 E3 ** 416409	32 19.9	2535 1736	1495 58.9	4029 158.6		11954 470.6	72 90.7		10640 2811			
MICHELIN XDR2 S B E3 ** 532463	28 17.4	2218 1519										
MICHELIN XDR B E4R ** 443800 (8)	24 14.9	1901 1302	1503 59.2	4028 158.6	1732 68.2	11946 470.3	116 146.1		10160 2684			
MICHELIN XDR B4 E4R ** 037664 (8)	20 12.4	1584 1085										
MICHELIN XDR A E4R ** 490159 (8)	16 9.9	1267 868										
MICHELIN XDR2 C4 E4R ** 621230	28 17.4	2218 1519			1742 68.6	11971 471.3	118 148.7		10060 2658			
MICHELIN XDR2 MC4 E4R ** 841736												
MICHELIN XDR2 B E4R ** 382280	24 14.9	1901 1302										
MICHELIN XDR2 B4 E4R ** 441191	20 12.4	1584 1085										
MICHELIN XDR2 A E4R ** 817054 (7)	16 9.9	1267 868										

CHARACTERISTICS OF MICHELIN EARTHMOVER TYRES

Tread type	Identification code (11)	Explanations on how to choose the tyre and to determine the inflation pressures Refer to explanations and methods allowing to determine the inflation pressure (10)											

63"

	Machine - Use	bar psi	5 73	5.5 80	6 87	6.5 94	6.7 97					
XDR S C4 ** E3 XDR C4 ** E4R XDR B ** E4R XDR B4 ** E4R XDR2 C4 ** E4R XDR2 MC4 ** E4R XDR2 B ** E4R XDR2 B4 ** E4R	Transport	Standard	82920 182839	89460 197259	96000 211680	98900 218075	100000 220500					

	Machine - Use	bar psi	6 87	6.5 94	6.8 99							
XDR S C4 ** E3 XDR S B ** E3 XDR2 S C4 ** E3 XDR2 S B ** E3 XDR B ** E4R XDR B4 ** E4R XDR A ** E4R XDR2 C4 ** E4R XDR2 MC4 ** E4R XDR2 B ** E4R XDR2 B4 ** E4R XDR2 A ** E4R	Transport	Standard	100000 220500	102100 225131	104000 229320							

NOTES

COMPONENTS USED WITH MICHELIN EARTHMOVER TYRES 84

COMPONENTS USED WITH MICHELIN EARTHMOVER TYRES

APPROVED RIMS FOR MICHELIN EARTHMOVER TYRES

RIM TYPES	RIM DESIGNATION	F MM INCHES	H (13) MM INCHES	A' MM INCHES	TYRE SIZES	SEAL
FLAT BASE RIMS 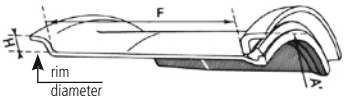	15 - **6.00 S**	152.4 6.0	33.3 1.3	448 17.6	7.50 R 15	none
	20 - **7.33 V**	186.2 7.3	44 **1.7**	596 23.5	9.00 R 20 E 20 P (13/80 R 20)	**Tyran** (A 20)
	20 - **8.00 V**	203.2 8.0	44 **1.7**	596 23.5	E 20 P (13/80 R 20)	
	20 - **8.50 V**	215.9 8.5	44 **1.7**	596 23.5	12.00 R 20 E 20 P (13/80 R 20)	
	20 - **9.00 V**	228.6 9.0	44 **1.7**	596 23.5	12.00 R 20 E 20 P (13/80 R 20)	
	20 - **10.00 V**	254 10.0	44 **1.7**	596 23.5	E 20 P (13/80 R 20)	
	20 - **10.00 W**	254 10.0	51 **2.0**	610 24.0	**16.00 R 20** 14.00 R 20	
	20 - **11.25**	286 11.3	51 **2.0**	610 24.0	16.00 R 20	none
	21 - **18.00**	457.2 18.0	38 **1.5**	609 24.0	**24 R 21**	(OR 6.6-21)
	24 - **7.33 V**	186.2 7.3	44 **1.7**	698 27.5	12.00 R 24 ***	none
	24 - **8.00 V**	203.2 8.0	44 **1.7**	698 27.5	12.00 R 24 ***	
	24 - **8.50 V**	216 8.5	44 **1.7**	698 27.5	12.00 R 24 ***	
	24 - **9.00 V**	228.6 9.0	44 **1.7**	698 27.5	14.00 R 24 *** 15.00 R 24 Pil	
	24 - **10.00 W**	254 10.0	51 **2.0**	712 28.0	**14.00 R 24 *** 15.00 R 24 Pil 385/95 R 24**	
15° TAPER DROP CENTRE RIMS *(DC - DROP CENTRE)* 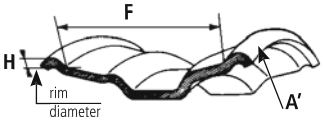	20.5 x **16.00**	406.5 16.0	12.7 **0.5**	546 21.5	**525/65 R 20.5**	none
	20.5 x **18.00**	457 18.0	12.7 **0.5**	546 21.5	**24 R 20.5**	
5° TAPER DROP CENTRE RIMS *(DC - DROP CENTRE)* 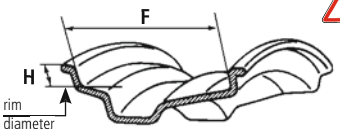	24 x **9.00/1.5**	228 9.0	38 **1.5**	690 27.0	14.00 R 24 * TG	
	25 x **12.00/1.3**	305 12.0	33 **1.3**	701 27.6	15.5 R 25 * L2 - L3	
	25 x **13.00/1.4**	330 13.0	36 **1.4**	707 27.8	15.5 R 25 * L2 - L3 17.5 R 25 * L2 - L3	
	25 x **14.00/1.3**	355 14.0	33 **1.3**	701 27.6	17.5 R 25 * L2 - L3	
	25 x **14.00/1.5**	355 14.0	38 **1.5**	711 28.0	17.5 R 25 * L2 - L3	
	DC 635 x 280 CR	280 11.0	43 **1.7**	721 28.4	445/95 R 25 XCRANE +	
5° TAPER SEMI DROP CENTRE RIMS *(SDC - SEMI DROP CENTRE)* 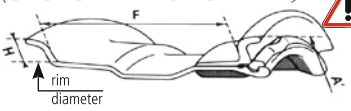	24 - **8.00 TG SDC**	203 8.0	35.5 **1.4**	685 27.0	**14.00 R 24 * TG**	**Heupo** (OR 2-25)
	24 - **10.00 VA SDC**	254 10.0	43 **1.7**	700 27.6	14.00 R 24 * TG **16.00 R 24 * TG**	
5° TAPER BEAD SEAT RIMS 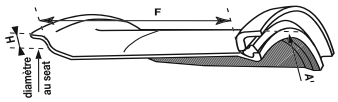	15 - **B 6.5**	165.1 6.5	38.1 **1.5**	460 18.1	**7.50 R 15** **8.25 R 15**	none
	15 - **10.50**	267 10.5	38 **1.5**	460 18.1	**14.5 R 15** 350/65 R 15	
	20 - **B 6.5**	165.1 6.5	38.1 **1.5**	589 23.2	9.00 R 20	**Tyran** (A 20)
	20 - **B 7.0**	177.8 7.0	38.1 **1.5**	589 23.2	**9.00 R 20**	
	20 - **7.0 T**	177.8 7.0	38.1 **1.5**	589 23.2	9.00 R 20	
	20 - **8.0 V**	203.0 8.0	44.4 **1.7**	602 23.7	E 20 P (13/80 R 20)	
	20 - **8.5 V**	216 8.5	44.4 **1.7**	602 23.7	12.00 R 20 E 20 P (13/80 R 20)	
	20 - **B 7.5**	190.5 7.5	43.2 **1.7**	599 23.6	9.00 R 20 E-20 P (13/80 R 20)	
	20 - **B 8.0**	203.2 8.0	43.2 **1.7**	599 23.6	E 20 P (13/80 R 20)	
	20 - **B 8.5**	216 8.5	45.7 **1.8**	604 23.8	12.00 R 20 E-20 P (13/80 R 20)	

(#) L: reduced flange height

⚠ *see note page 16 about TG tyre fitment*

RIM TYPES	RIM DESIGNATION	F MM INCHES	H (13) MM INCHES	A' MM INCHES	TYRE SIZES	SEAL
5° TAPER BEAD SEAT RIMS *(ADVANCED RIM)* 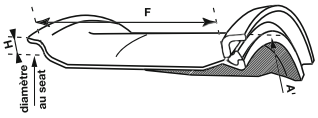	15 - **5.5**	139.7 5.5	30.5 **1.2**	448 17.6	7.50 R 15	none
	15 - **6.0**	152.4 6.0	33 **1.3**	453 17.8	**7.50 R 15** 8.25 R 15	
	15 - **6.5**	165.1 6.5	35.6 **1.4**	459 18.1	**7.50 R 15** **8.25 R 15**	
	15 - **7.0**	177.8 7.0	38 **1.5**	429 16.9	10.00 R 15 **8.25 R 15**	
	15 - **7.5**	190.5 7.5	40.6 **1.6**	469 18.5	**10.00 R 15**	
	15 - **11.0**	267 10.5	38 **1.5**	464 18.3	14.5 R 15	
	15 - **11.00 BD**	267 10.5	36 **1.4**	459 18.1	14.5 R 15	
	15 - **11.50**	267 10.5	38 **1.5**	463 18.2	14.5 R 15 **350/65 R 15** **400/80 R 15**	
	20 - **6.5**	165.1 6.5	35.6 **1.4**	586 23.1	9.00 R 20	**Tyran** (A 20)
	20 - **7.0**	177.8 7.0	38 **1.5**	556 21.9	**9.00 R 20**	
	20 - **7.5**	190.5 7.5	40.6 **1.6**	596 23.5	9.00 R 20 E 20 P (13/80 R 20)	
	20 - **8.0**	203.2 8.0	43.2 **1.7**	601 23.7	12.00 R 20 E 20 P (13/80 R 20)	
	20 - **8.5**	215.9 8.5	45.7 **1.8**	606 23.9	**12.00 R 20** E 20 P (13/80 R 20)	
	20 - **9.0**	228.6 9.0	48.3 **1.9**	611 24.1	12.00 R 20 **E 20 P (13/80 R 20)**	
	20 - **10.0**	254 10.0	50.8 **2.0**	616 24.3	E 20 P (13/80 R 20) **14.00 R 20**	
	24 - **8.0**	203.2 8.0	43.2 **1.7**	702 27.6	12.00 R 24 ***	none
	24 - **8.5**	215.9 8.5	45.7 **1.8**	707 27.8	**12.00 R 24 *** **	
	24 - **9.0**	228.6 9.0	48.3 **1.9**	713 28.1	14.00 R 24 *** 15.00 R 24 Pil	
	24 - **10.0**	254 10.0	50.8 **2.0**	718 28.3	**14.00 R 24 *** ** **15.00 R 24 Pil** 385/95 R 24	
5° TAPER BEAD SEAT RIMS *(3 PIECES)* 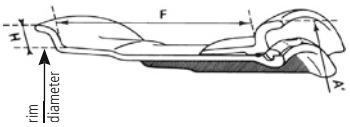	24 - **11.25/1.3**	286 11.3	33 **1.3**	675 26.6	385/95 R 24	none
	25 - **10.00/1.5**	254 10.0	38 **1.5**	711 28.0	**14.00 R 25** **385/95 R 25**	Heupo (OR 2-25)
	25 - **11.25/1.3**	286 11.3	33 **1.3**	701 27.6	14.00 R 25 385/95 R 25	
	25 - **11.25/2.0 IF(*)**	284 11.2	51 **2.0**	737 29.0	14.00 R 25 **16.00 R 25** 445/95 R 25	Sulla (OR 3-25)
	25 - **12.00/1.3**	305 12.0	33 **1.3**	701 27.6	**15.5 R 25** **385/95 R 25**	Heupo (OR 2-25)
	25 - **13.00/2.5 IF(*)**	330 13.0	63.5 **2.5**	762 30.0	**18.00 R 25** **505/85 R 25**	Sulla (OR 3-25)
	25 - **14.00/1.3**	356 14.0	33 **1.3**	701 27.6	**445/80 R 25**	Heupo (OR 2-25)
	25 - **14.00/1.5**	355 14.0	38 **1.5**	711 28.0	**17.5 R 25** 445/80 R 25	
	25 - **15.00/3.0 IF(*)**	381 15.0	76 **3.0**	787 31.0	**21.00 R 25**	Sulla (OR 3-25)
	25 - **17.00/1.7**	432 17.0	43 **1.7**	721 28.4	**20.5 R 25 *** **550/65 R 25**	Heupo (OR 2-25)
	25 - **17.00/2.0 IF(*)**	432 17.0	51 **2.0**	737 29.0	**20.5 R 25** 525/80 R 25 **550/65 R 25**	Sulla (OR 3-25)
	25 - **19.50/2.5 IF(*)**	495 19.5	63.5 **2.5**	762 30.0	**23.5 R 25** **600/65 R 25** **650/65 R 25** **660/65 R 25**	
	25 - **22.00/3.0 IF(*)**	559 22.0	76 **3.0**	787 31.0	**26.5 R 25** **650/65 R 25** **660/65 R 25** 750/65 R 25	
	25 - **25.00/3.5 IF(*)**	635 25.0	89 **3.5**	813 32.0	**29.5 R 25** **850/65 R 25**	

(*) New wheels have additional marking "IF". The IF flanges feature an Integrated Flange, suited for radial tyres. The width of the flange is larger.

RIM TYPES	RIM DESIGNATION	F MM INCHES	H (13) MM INCHES	A' MM INCHES	TYRE SIZES	SEAL
"CR" RIMS 3 PIECE *FOR CRANES* 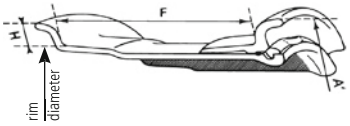	25 - **9.50/1.7 CR**	241 9.5	43 **1.7**	721 28.4	14.00 R 25 385/95 R 25	**Sulla** (OR 3-25)
	25 - **11.00/1.7 CR**	279 11.0	43 **1.7**	721 28.4	16.00 R 25 445/95 R 25	
	25 - **14.00/1.7 CR**	355 14.0	43 **1.7**	721 28.4	17.5 R 25 445/80 R 25	
	25 - **17.00/1.7 CR**	432 17.0	43 **1.7**	721 28.4	20.5 R 25 525/80 R 25	
5º TAPER BEAD SEAT RIMS *(5 PIECES)* 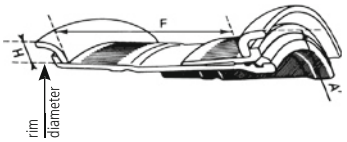	25 - **10.00/2.0**	254 10.0	51 **2.0**	737 29.0	505/85 R 25	**Sulla** (OR 3-25)
	25 - **11.25/2.0**	284 11.2	51 **2.0**	737 29.0	14.00 R 25 **16.00 R 25** 445/95 R 25	
	25 - **13.00/2.0**	330 13.0	51 **2.0**	737 29.0	16.00 R 25 445/95 R 25	
	25 - **13.00/2.5**	330 13.0	63.5 **2.5**	762 30.0	**18.00 R 25** **505/85 R 25**	
	25 - **15.00/2.5**	381 15.0	63.5 **2.5**	762 30.0	18.00 R 25 505/85 R 25	
	25 - **15.00/3.0**	381 15.0	76 **3.0**	787 31.0	**21.00 R 25**	
	25 - **17.00/2.0**	432 17.0	51 **2.0**	737 29.0	**20.5 R 25** 525/80 R 25 **550/65 R 25**	
	25 - **17.00/3.0**	432 17.0	76 **3.0**	787 31.0	21.00 R 25	
	25 - **19.50/2.0**	495 19.5	51 **2.0**	737 29.0	25/65 R 25	
	25 - **19.50/2.5**	495 19.5	63.5 **2.5**	762 30.0	**23.5 R 25** **600/65 R 25** **650/65 R 25** **660/65 R 25**	
	25 - **20.00/2.0**	508 20.0	51 **2.0**	737 29.0	**25/65 R 25**	
	25 - **22.00/3.0**	559 22.0	76 **3.0**	787 31.0	**26.5 R 25** **650/65 R 25** **660/65 R 25** 750/65 R 25	
	25 - **24.00/3.0**	610 24.0	76 **3.0**	787 31.0	**750/65 R 25**	
	25 - **25.00/3.0**	635 25.0	76 **3.0**	787 31.0	**750/65 R 25**	
	25 - **25.00/3.5**	635 25.0	89 **3.5**	813 32.0	**29.5 R 25** **850/65 R 25**	
	25 - **27.00/3.5**	687 27.0	89 **3.5**	813 32.0	850/65 R 25	
	29 - **22.00/3.0**	559 22.0	76 **3.0**	889 35.0	**26.5 R 29** 30/65 R 29	**Sulky** (OR 3-29)
	29 - **24.00/3.0**	610 24.0	76 **3.0**	889 35.0	**30/65 R 29** 26.5 R 29	
	29 - **24.00/3.5**	610 24.0	89 **3.5**	915 36.0	29.5 R 29 800/65 R 29	
	29 - **25.00/3.5**	635 25.0	89 **3.5**	915 36.0	**29.5 R 29**	
	29 - **27.00/3.0**	687 27.0	76 **3.0**	889 35.0	**800/65 R 29** **875/65 R 29**	
	29 - **27.00/3.5**	686 27.0	89 **3.5**	915 36.0	**33.25 R 29**	
	33 - **13.00/2.5**	330 13.0	63.5 **2.5**	965 38.0	**18.00 R 33**	**Strix** (OR 3-33)
	33 - **15.00/3.0**	381.0 15	76.2 **3.0**	991 39.0	**21.00 R 33**	
	33 - **28.00/4.0**	711 28.0	101.5 **4.0**	1041 41.0	**33.5 R 33**	
	33 - **28.00/3.5**	711 28.0	89 **3.5**	1016 40.0	**35/65 R 33**	
	33 - **32.00/4.5**	813 32.0	114.5 **4.5**	1067 42.0	**37.5 R 33**	

RIM TYPES	RIM DESIGNATION	F MM INCHES	H (13) MM INCHES	A' MM INCHES	TYRE SIZES	SEAL
5° TAPER BEAD SEAT RIMS (5 PIECES) 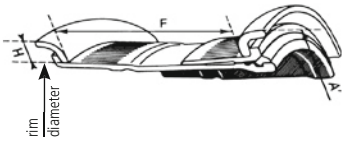	35 - **15.00/3.0**	381 15.0	76 **3.0**	1041 41.0	**21.00 R 35**	**Stras** (OR 3-35)
	35 - **17.00/3.0**	432 17.0	76 **3.0**	1041 41.0	21.00 R 35	
	35 - **17.00/3.5**	432 17.0	89 **3.5**	1067 42.0	**24.00 R 35**	
	35 - **25.00/3.5**	635 25.0	89 **3.5**	1067 42.0	**29.5 R 35**	
	35 - **27.00/3.5**	686 27.0	89 **3.5**	1067 42.0	**33.25 R 35** 29.5 R 35	
	35 - **29.00/3.5**	737 29.0	89 **3.5**	1067 42.0	33.25 R 35 37.25 R 35	
	35 - **31.00/4.0**	787 31.0	101.5 **4.0**	1092 43.0	**37.25 R 35**	
	39 - **32.00/4.5**	813 32.0	114.5 **4.5**	1220 48.0	**37.5 R 39** **40.5/75 R 39** 45/65 R 39	**Fuodi** (OR 3-39)
	45 - **36.00/4.5**	914 36.0	114.5 **4.5**	1372 54.0	**45/65 R 39** **45/65 R 45**	**Réf. 1580** (OR 3-45)
	49 - **17.00/3.5**	432 17.0	89 **3.5**	1423 56.0	**24.00 R 49**	**Heyco** (OR 3-49)
	49 - **19.50/4.0**	495 19.5	101.5 **4.0**	1448 57.0	**27.00 R 49**	
	51 - **22.00/4.5**	559 22.0	114.5 **4.5**	1524 60.0	**30.00 R 51**	**Réf. 1479** (OR 4-51)
	51 - **24.00/5.0**	610 24.0	127 **5.0**	1549 61.0	**33.00 R 51**	
	51 - **26.00/5.0**	660 26.0	127 **5.0**	1549 61.0	**36.00 R 51**	
	57 - **27.00/6.0**	686 27.0	152 **6.0**	1752 69.0	**37.00 R 57**	**Réf. 1481** (OR 4-57)
	57 - **29.00/6.0**	736 29.0	152 **6.0**	1752 69.0	**40.00 R 57** 37.00 R 57 50/80 R 57 XDR250	
	57 - **32.00/5.0**	813 32.0	127 **5.0**	1702 67.0	40.00 R 57	
	57 - **32.00/6.0**	813 32.0	152 **6.0**	1752 69.0	40.00 R 57 **50/80 R 57 XDR250** 50/80 R 57 XDR	
	57 - **32.00/6.5**	813 32.0	165 **6.5**	1778 70.0	**50/90 R 57**	
	57 - **34.00/6.0**	863 34.0	152 **6.0**	1752 60.0	**50/80 R 57 XDR**	
	57 - **42.00/5.0**	1067 42.0	127 **5.0**	1702 67.0	55/80 R 57	
	57 - **44.00/5.0**	1117 44.0	127 **5.0**	1702 67.0	**55/80 R 57**	
	57 - **47.00/5.0**	1194 47.0	127 **5.0**	1702 67.0	**60/80 R 57**	
	63 - **36.00/5.0**	914 36.0	127 **5.0**	1854 73.0	**53/80 R 63**	**Réf. 2053** (OR 4-63)
	63 - **38.00/5.0**	965 38.0	127 **5.0**	1854 73.0	**53/80 R 63**	
	63 - **41.00/5.0**	1041 41.0	127 **5.0**	1854 73.0	**55/80 R 63** **56/80 R 63**	
	63 - **44.00/5.0**	1117 44.0	127 **5.0**	1854 73.0	**59/80 R 63**	

TUBES AND FLAPS FOR MICHELIN EARTHMOVER TYRES

RIM DIAMETER	FITS TYRE SIZES	TUBE REFERENCE	VALVE REFERENCE	VALVE TYPE (#)	TUBE + VALVE CAI	FLAP REFERENCE	FLAP CAI
15"	7.50 R 15	**15/16 J**	570	SC	101106	15 x 6.00 (8)	511268
	8.25 R 15	**15 K**	1221	DC	101126	15 x 6.00 E	843437
						15 x 7.50 (8)	084220
	10.00 R 15	**15 P**	582	TC	510204	15 x 7.50 E	904287
20"	E 20 Pilote	**20 P**	1158	SC	101173	20 x 8.50 (8)	111005
	12.00 R 20	**20 Q**	1158	SC	101192	20 x 8.50 E	162318
	14.00 R 20	**20 Q**	1158	SC	101192	20x10.00 (8)	004489
	16.00 R 20	**20 V**	576	SC	511937	20x10.00 E	622293
20.5"	525/65 R 20.5	**19.5/20.5 UD**	1964	DR	101280	-	-
	24 R 20.5	**20.5 WAMD**	1837 (TRJ650)	SC	101331	-	-
21"	24 R 21	**21 WAM**	1837 (TRJ650)	SC	101333	17-20 (8)	551436
24"	12.00 R 24	**24 Q**	582	TC	101196	24/25 x 8.50 (8)	001444
						24/25 x 8.50 E	018130
	14.00 R 24 TG on DC and SDC rims 13.00 R24 TG on DC and SDC rims	**KLEBER 703**	TR 218A	DR	171114	13-24 DR (8)	102902
	14.00 R 24 TG on DC and SDC rims	**24 TD**	577	SC	101244		
24/25"	14.00 R 24 on flat base rims	**24/25 T**	752	SC	514503	13-24/25 (8)	551600
	385/95 R 25 385/95 R 24						
	15.00 R 24						
	13.00 R 25					24/25 x 8.50 (8)	001444
						24/25 x 8.50 E	018130
	14.00 R 25					13-24/25 (8)	551600
	14.00 R 24 on flat base rims	**24/25 T AM**	1837 (TRJ650)	SC	101781	13-24/25 S (8)	551601
	15.00 R 24						
	14.00 R 25						
	17.5 R 25					16-24/25 (8)	551608
	16.00 R 25	**24/25 V AM**	1837 (TRJ650)	SC	101811	14-24/25 (8)	551604
	20.5 R 25					17-24/25 (8)	551610
	16.00 R 24* on SDC rims	**24/25 VD**	577	SC	101299	13-24 DR (8)	102902
25"	15.5 R 25	**25 S AM**	1837 (TRJ650)	SC	101771	15-24/25 (8)	551606
	18.00 R 25	**25 W AM**	1837 (TRJ650)	SC	101871	16-24/25 (8)	551608
	23.5 R 25					18-24/25 (8)	551612
	21.00 R 25	**25 YB AM**	1837 (TRJ650)	SC	101346	17-24/25 (8)	551610
	26.5 R 25					18-24/25 (8)	551612
	29.5 R 25					19-25 (8)	102610
29"	26.5 R 29	**29 W AM**	1837 (TRJ650)	SC	101823	19-29 (8)	102620
	29.5 R 29 33.25 R 29	**29 YE AM1 (8)**	1837 (TRJ650)	SC	101803		
33"	18.00 R 33	**33 VF AM (8)**	1837 (TRJ650)	SC	101321	16-33 (8)	551760
	33.5 R 33	**33/35 YE AM (8)**	1837 (TRJ650)	SC	101833	20-33 (8)	551770
35"	24.00 R 35					16-35 (8)	551800
	29.5 R 35	**33/35 YE AM (8)**	1837 (TRJS650)	SC	101833	20-35 (8)	551808
	33.25 R 35						
	37.25 R 35						

(#) DR = straight valve, SC = single bend valve, DC = double bend valve, TC = triple bend valve, see on following pages the parte 'valves and associated accessories'.

EXPLANATION ON THE TUBE MARKINGS

example1: **24/25 V AM** example2: **25 YB AM**

The first two numbers indicate the bead seat (rim) diameter of the tyre into which the tube can be fitted (in the first example, the tube may be fitted in 24 and 25 inch tyres. In the second example, the tube may be fitted only in 25 inch tyres).
The first letter corresponds to the section width of the tube (internal width of the tyre).
This ranges from A to Z, with A being the smallest, and Z the largest (in the examples above, V and Y indicate that the tubes are designed for fitting into tyres of relatively large section width).
Sometimes, a second letter provides additional information (example 2) B, E, F and H indicate intermediate widths.
The third and fourth letters are an indication of the valve type.
AM indicates that the tube is fitted with an American valve base: R1946 (TRA SP4000) and a valve stem R1837 (TRJ 650).
D would indicate that the valve is offset. T would indicate a tractor tube fitted with an air-water valve, type TR 218A.
Explanation on valves and valve bases are given on subsequent pages.

EXPLICATIONS ON THE FLAP MARKINGS

example1: **14-24/25**

The first number indicates the total width of the flap when laid flat (includes height of edges), expressed in either mm or in inches.
In the example above, the width of the flap is 14 inches.
The second number indicates the rim diameter, or the tyre bead seat (rim) diameter in inches, with which the flap is to be used.
In this example, the flap may be used with 24 and 25 inch tyres.
Additional letters may be used to provide supplementary information.
For example, the significance of different letters is as follows: L - the edges are tapered, B - the flap has a reinforcing boss around the valve hole, S - the flap is reinforced, D - offset hole valve.

example2: **20 x 8.50 E**
The first number indicates the tyre seat diameter, expressed in inches, with which the flap is to be used.
In this example, the flap may be used with 20 inch tyres.
The second number indicates the overall width of the flap (width + height), in inches.
In this example, the overall width of the flap is 8.50 inches.
Letters correspond to the last generation of flaps.

SEALING RINGS FOR MICHELIN EARTHMOVER TYRES

NAME	DESIGNATION	REFERENCE	CAI	TYPE	REMARKS
-	OR 6.6 - 21	R 1506	553 213	O-ring	
HEUPO	OR 2 - 25	R 1438	553 201	O-ring	for fitting 25" rim (3 pieces) for fitting 12.00 R 24, 13.00 R 24,14.00 R 24 and 555/70 R 24 tyres on TG and SDC rim
SULLA	OR 3 - 25	R 1437	553 200	O-ring	for 10 WA rim, for 25" rim (5 pieces) and for 3 pieces CR rims (cranes)
SULKY	OR 3 - 29	R 1439	553 202	O-ring	for 29" rim
STRIX	OR 3 - 33	R 1440	553 203	O-ring	for 33" rim
STRAS	OR 3 - 35	R 1441	553 204	O-ring	for 35" rim
FUODI	OR 3 - 39	R 1069	553 206	O-ring	for 39" rim
-	OR 3 - 45	R 1580	553 214	O-ring	for 45" rim
HEYCO	OR 3 - 49	R 1442	553 205	O-ring	for 49" rim
-	OR 4 - 51	R 1479	553 210	O-ring	for 51" rim
-	OR 4 - 57	R 1481	553 211	O-ring	for 57" rim
-	OR 4 - 63	R 2053	553 056	O-ring	for 63" rim
TYRAN	A20	R 1443	553 004	Corner seal	for 20" rim
LEMMERZ	-	3886-6	800 098	Corner seal	for fitting TG tyres on 24" SDC rims
-	B 24/25	R 1528	553 021	Corner seal	
ICERU	G 25	R 1237	553 012	Corner seal	for fitting 12.00 R 24 XMINE D2

SEALS DESCRIPTION

O-RING

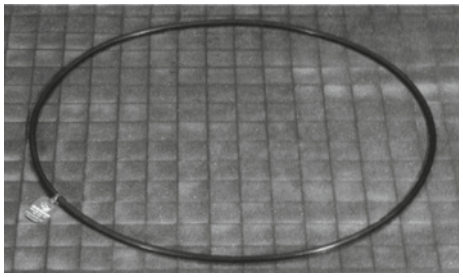

Explanation of the sealing ring's naming process:
- OR: Abbreviation of O Ring
- The first number is the section diameter of the seal:
- integer number: value expressed in 1/8 of inch (3 = 3/8)
- decimal number: value expressed in mm (6.6 = 6,6 mm)
- The second number is the nominal bead seat diameter, expressed in inches.

CORNER SEAL

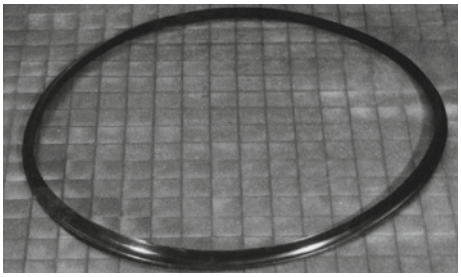

Explanation of the corner seal's naming process:
- The letter indicates the profile of the seal
- The number is the nominal rim diameter, in inches.

NOTE:
APPROVAL FOR USE OF CORNER SEALS MUST BE OBTAINED FROM MICHELIN.

VALVES AND ASSOCIATED ACCESSORIES FOR MICHELIN EARTHMOVER TYRES

In all cases, the valve cap is essential because it helps maintain the cleanliness of the mechanism and ensure air tightness of the valve.

CAR TUBE TYPE STRAIGHT VALVE

VALVE MARKINGS

The valve is circular and is marked in accordance with ETRTO standards, starting at the top of the valve, and in the following order:
- NAME (or trademark) of the valve manufacturer and his reference number.
- ETRTO reference number.

Michelin code	ETRTO code	Valve code	Valve hole ø in mm
611	V2-01-2	TR 15	16
746	V2-01-1	TR 13	11.5

FITTING A UNIVERSAL VALVE ON A MICHELIN TUBE WITH A VALVE BASE

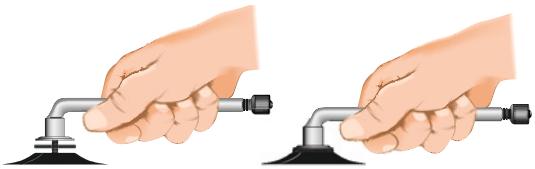

1 - Position the sealing ring on the valve.
The sealing ring must be clean and dry.
2 - Hand tighten the valve until it just touches the sealing ring.
3 - Tighten the valve for a further two turns.
4 - To orientate the valve in the desired position, tighten further.

IMPORTANT: never unscrew the valve to the desired position.

Note: Do not exceed the tightening guidelines given above. Do not forget to replace the valve cap to prevent dirt ingress and to ensure air tightness.

SMALL TRUCK UNIVERSAL STRAIGHT VALVE

Fitted to Michelin tubes for the occasional equipment Tube-Type on 5° and 15° non U taper drop centre rim.

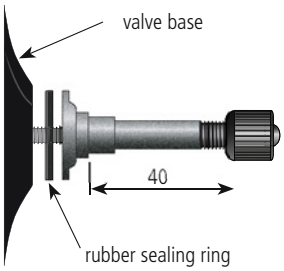

Michelin code	ETRTO code	Valve hole ø in mm	A	
			mm	inches
1964	/	9.7	40	1.57

TRUCK TYPE UNIVERSAL SINGLE BEND VALVE

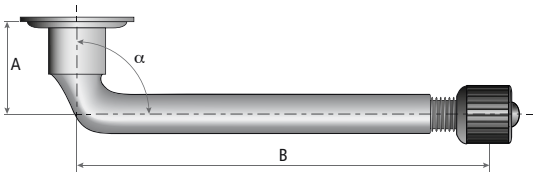

Michelin code	ETRTO code	A		B		α°
		mm	pouces	mm	inches	
570	V3-02-2	22.5	0.89	43	1.69	120
576	V3-02-3	33	1.30	44.5	1.75	95
577	V3-02-4	39.5	1.56	44.5	1.75	110
752	V3-02-17	20.5	0.81	156.5	6.16	90
1158	V3-02-14	20.5	0.81	138.5	5.45	94

TRUCK TYPE UNIVERSAL TRIPLE BEND VALVE

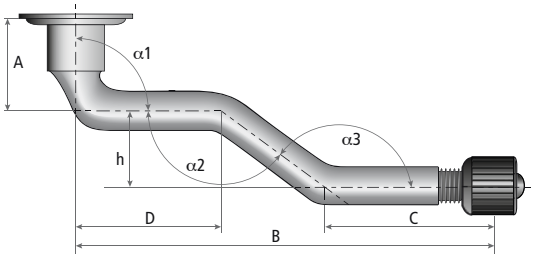

Michelin code	ETRTO code	α1°	α2°	α3°
582	V3-06-5	90	139	139

A		B		C		D	
mm	inches	mm	inches	mm	inches	mm	inches
20.5	0.81	131	5.16	49	1.93	62.5	2.46

TYPES OF TUBELESS EARTHMOVER VALVES

VALVE TYPE A1

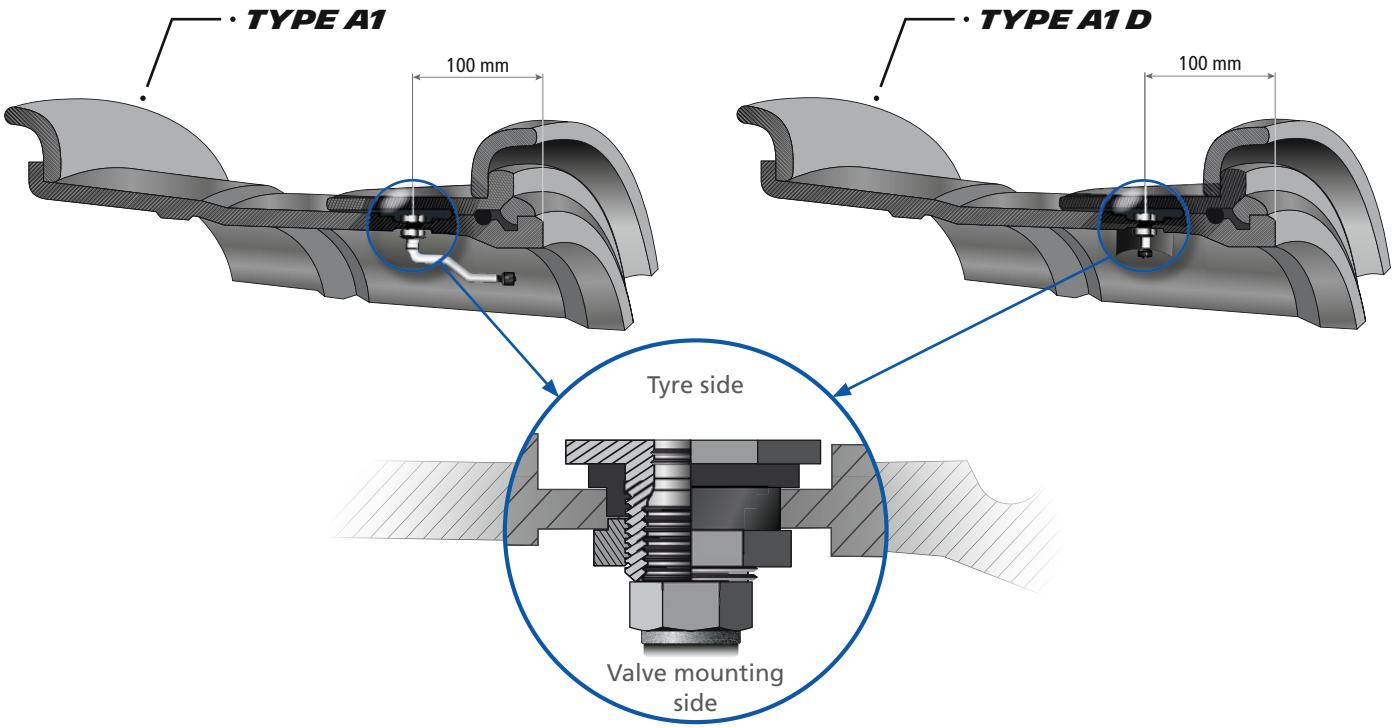

VALVE COMBINATION TYPE A4
Comprised of two TYPE A1 valves, both set at 100 mm from the rim edge, to enable water filling.

VALVE TYPE A2

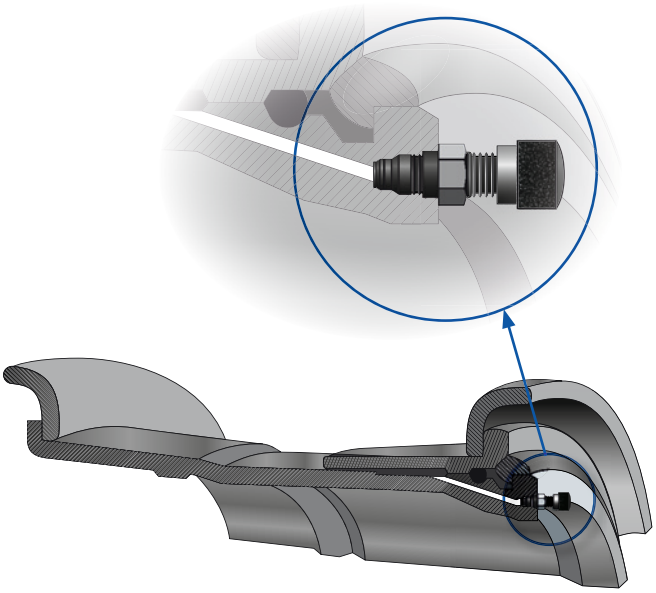

VALVE TYPE A3

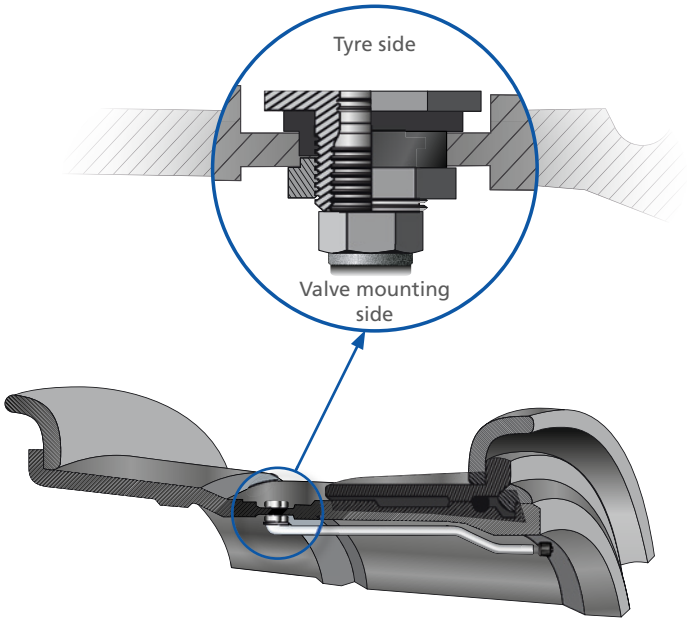

AIR AND WATER TUBELESS VALVES, AMERICAN TRA STANDARD

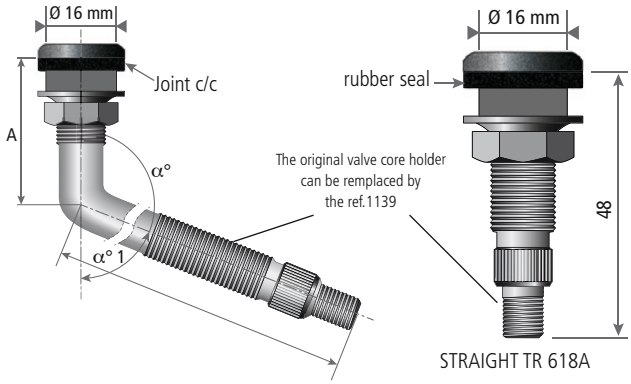

TRA code	ETRTO designation	A		B		α°
		mm	inches	mm	inches	
TR 618 A	V5-01-1	47.5	1.87	-		-
TR 621 A	V5-02-1	39	1.54	76	2.99	115°
TR 622 A	V5-02-2	44.5	1.75	117	4.61	90°
TR 623 A	V5-02-3	39	1.54	57	2.24	115°

Valves for 15.7 mm (0.6 inch) diameter hole

EARTHMOVER TUBELESS VALVE (AMERICAN TRA STANDARD)

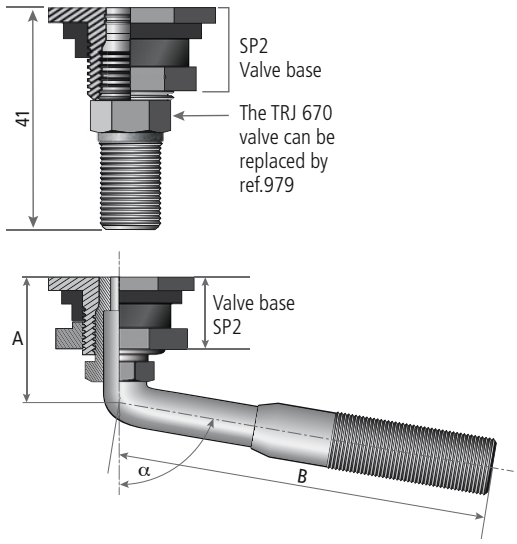

Michelin code	TRA code	ETRTO designation	A		B		α°
			mm	inches	mm	inches	
R 1837	TRJ 650	V5-04-1	27	1.08	79	3.12	100°
	TRJ 651	V5-04-2	32	1.27	119	4.69	90°
	TRJ 652		27	1.08	140	5.5	94°
	TRJ 653		27	1.08	63	2.5	100°
	TRJ 654		27	1.08	79	3.12	120°
	TRJ 655		27	1.08	79	3.12	106°
	TRJ 656		67	2.62	94	3.69	90°
	TRJ 657		27	1.08	102	4	100°
	TRJ 658		27	1.08	140	5.5	100°
	TRJ 659		48	1.89	89	3.5	90°
	TRJ 660		48	1.89	222	8.75	90°
	TRJ 669		27	1.08	64	2.5	90°
R 979	TRJ 670		41	1.63	-	-	-

Valves used on an American valve base SP2
[20.5 mm (0.8 inch) diameter hole] and also on AM tubes.

STRAIGHT LARGE BORE VALVES

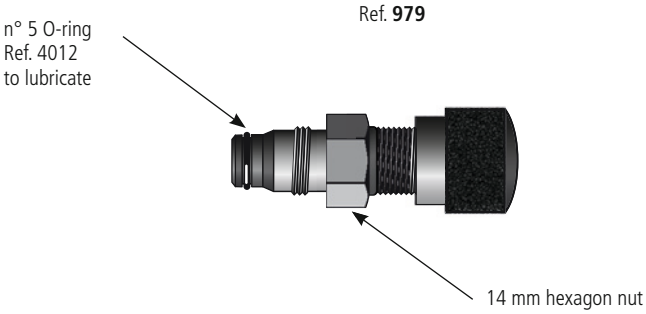

Used with **Type A2** rim contour or with **SP2 base (may also replace TRJ 670).**

SINGLE PIECE VALVES (20,5 mm valve hole)

TRA code	A		B		C		D		H		α°
	mm	inches	mm	inches	mm	inches	mm	inches	mm	inches	
TRJ 690	16	0.63	119	4.69	32	1.26	27	1.06	14	0.55	28
TRJ 691	16	0.63	84	3.31							18
TRJ 693	16	0.63	127	5.00					25	0.98	

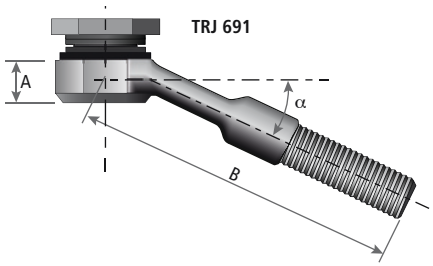

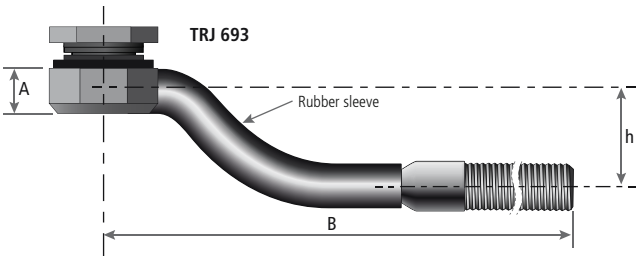

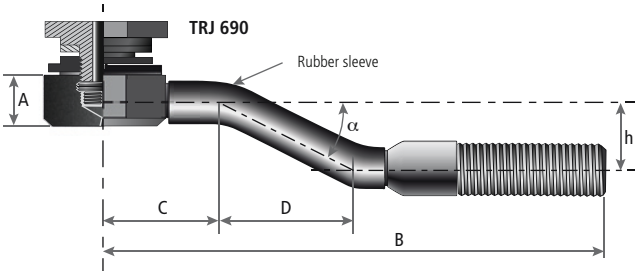

AIR AND WATER TUBELESS STRAIGHT RUBBER VALVES

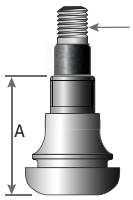

The original valve core holder can be replaced by Ref. 1139

A mm/inches		Designation
35	1.38	35 GSW 15.7

Valves for 15.7 mm (0.6 inch) diameter hole

Caution ! Don't use this valve with pressures higher than 4,5 bar.

VALVE BASE

ACTUAL VALVE
(fitment with tube)

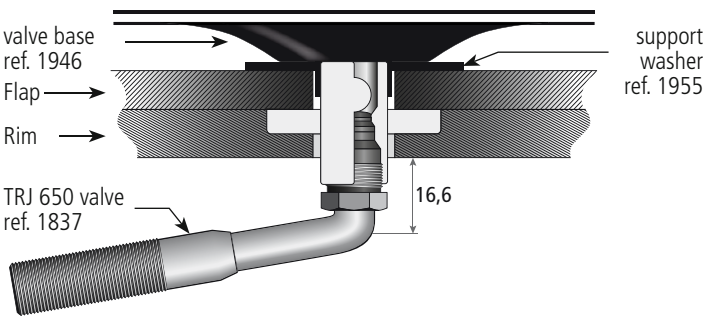

AIR AND WATER AGRICULTURAL TYPE VALVE BASE
Allows tyre to be water filled.
Valve with core holder 1139 and plastic nut ref. 1225

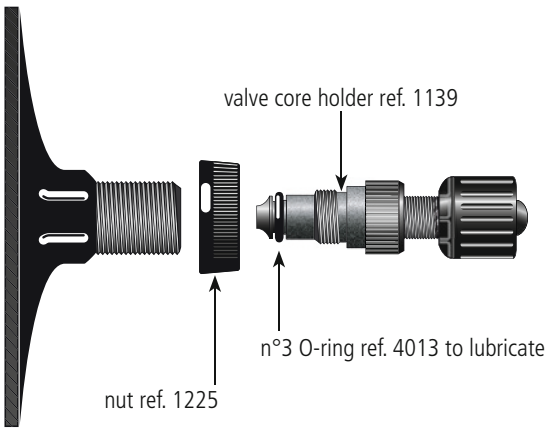

ref. **1224** code TR 218A

HELP WITH THE USE OF EARTHMOVER TYRES

MICHELIN EARTHMOVER TYRES FOR TRANSPORT MACHINES

DETERMINING INFLATION PRESSURES

- **determine** the maximum load on each tyre by weighing.

This is the only way that tyre pressures can be set accurately for optimum performance.

If it is not possible to weigh the machine, determine the maximum load per tyre on each axle by calculation or by using the machine manufacturer's data.

The following data needs to be established:
- The Gross Vehicle Weight (total machine weight in the laden condition).
- The percentage load distribution by axle.

- **calculate** the load per axle, then determine the tyre weight by dividing the axle load by the number of tyres per axle.
- **use** the tables "Tyre loads and pressures" for TRANSPORT in the earthmover data book.

This method applies to the following machine tyres:
Rigid Dump Trucks
Articulated Dump Trucks
Bottom Dump Trucks
Motor Scrapers
Site Dump Trucks

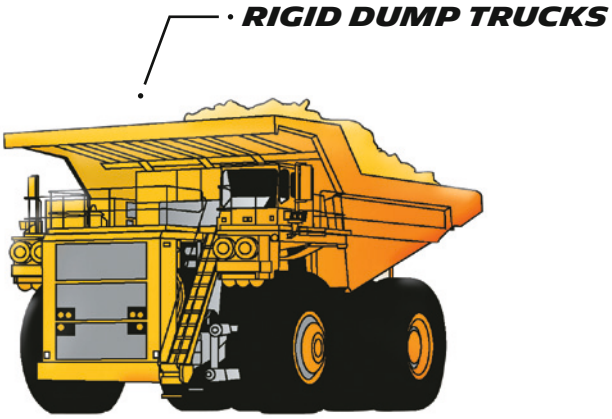

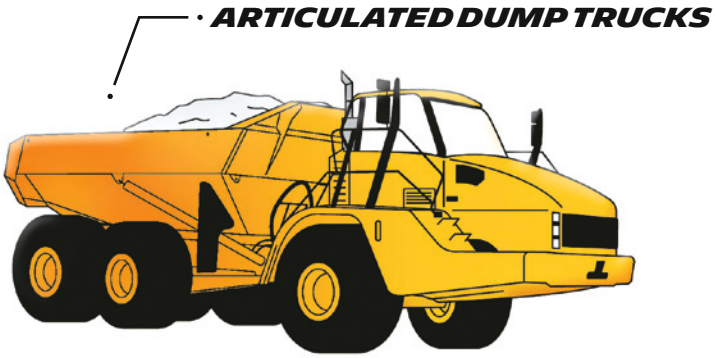

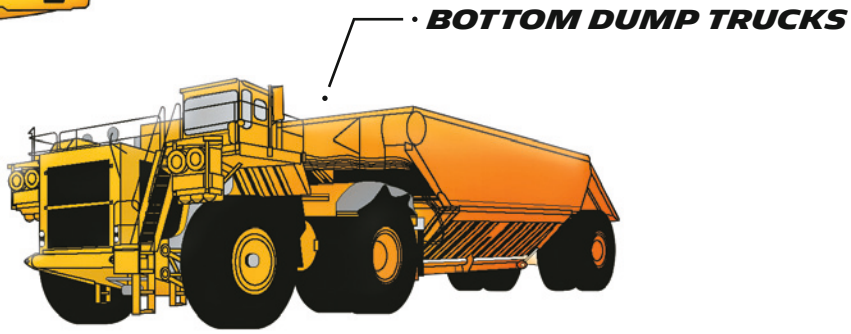

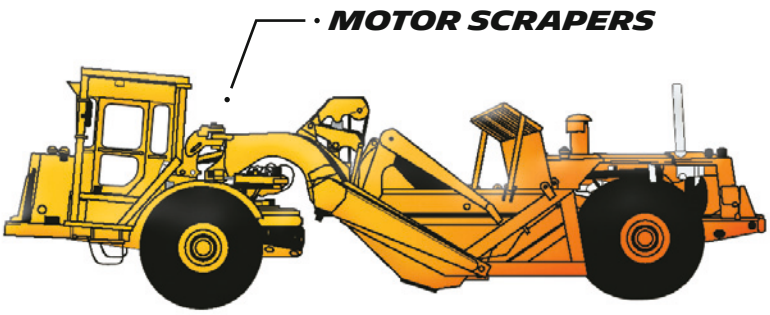

MICHELIN EARTHMOVER TYRES FOR MOBILE CRANES, SPECIAL APPLICATIONS, RAPID INTERVENTION VEHICLES (CIVIL AND MILITARY)

DETERMINING INFLATION PRESSURES

- **determine** the maximum load on each tyre by weighing
- by using the machine manufacturer's data, or
- by weighing each axle.

- **calculate** the load per tyre (in the case of a crane, divide the total weight by the number of axles, and divide by the number of tyre per axle).

- **use** the tables "Tyre loads and pressures" for CRANES to determine the tyre pressures.
- In the case of use of tyres on special machines, please consult MICHELIN.

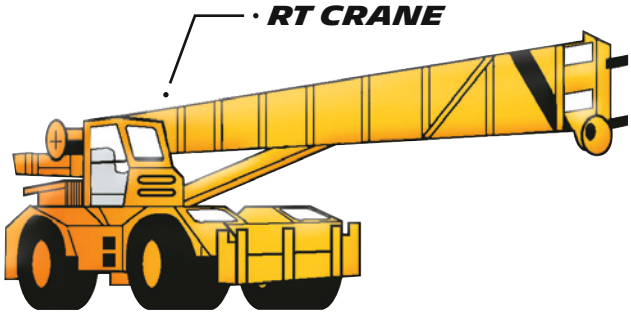

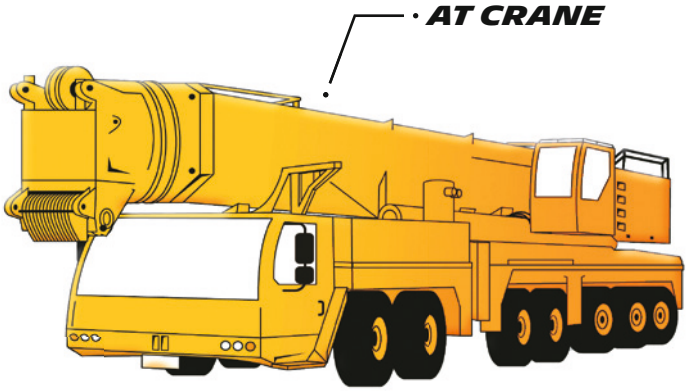

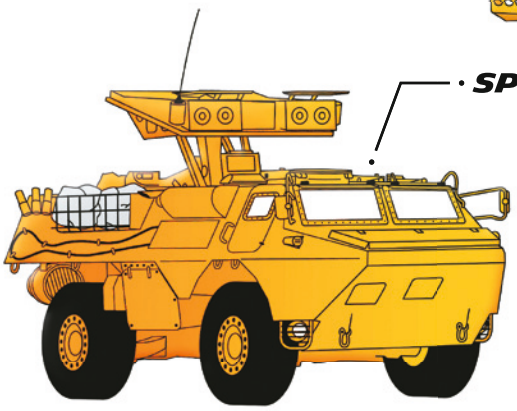

MICHELIN EARTHMOVER TYRES USED IN DESERT AND SIMILAR CONDITIONS

These tyres are used on machines that are operated in special conditions, such as sand, desert regions, etc.

Two speed limits are applied to the tyres according to the type of work.
- A limit for use on sand and hard track.
- A higher limit for road use with no particular problem of grip or accidental damage.

INFLATION PRESSURES

For a given load, the inflation pressure depends on the rolling condition
- **Road**
- **Track**
- **Sand**

Refer to the table load / pressure corresponding to the selected type of driving.
After using "sand" pressures, they must be adjusted to the correct pressure for subsequent conditions of use (road or track).

MICHELIN EARTHMOVER TYRES FOR WORKING MACHINES SURFACE LOADERS IN REHANDLING, PRODUCTION, EXTRACTION AND FACE WORK

BASE PRESSURES

The base pressures designate the necessary pressure for the load carried.
There are two ways to determine the base pressures of a loader.

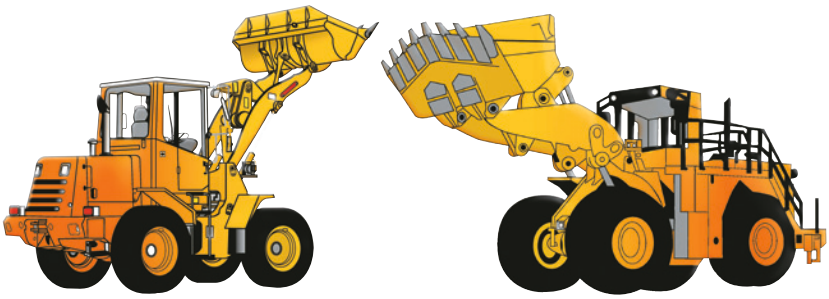

BY WEIGHING THE MACHINE AXLES

- **determine** the maximum load on each tyre by weighing.
- **use** the tables "Tyre loads and pressures" for LOADERS from the technical data book.
  "Front laden": for the laden front axle. (bucket full)
  "Rear unladen": for the unladen rear axle. (bucket empty)

BY CALCULATION, USING THE MACHINE MANUFACTURER'S DATA

- **determine** the maximum load on each tyre from the axle loads (bucket empty / full) data by the Manufacturer.
- **use** the tables "Tyre loads and pressures" for LOADERS from the technical data book.
  "Front laden": for the laden front axle. (bucket full)
  "Rear unladen": for the unladen rear axle. (bucket empty)

When the axle loads are not available, it is possible to determine in an approximate way the inflation pressures from the method below.
This method is applicable to loaders equipped with tire sizes less than 35/65 R 33

Front Axle
When the machine is loading with the bucket penetrating into the material, the loader is often at the point of tipping. It is in this state that the front tyres are most heavily laden.
The load on the front axle is equal to the total unladen weight of the machine + the tipping load. (tipping load is shown in the machine manufacturer's data).

- **use** the tables "Tyre loads and pressures" for LOADERS in the earthmover data book under the heading 'Front Tip. Load' (front tipping load).

Rear Axle (bucket empty)
Take 60% of the unladen weight of the machine (to have a margin of safety).

- **use** the tables "Tyre loads and pressures" for LOADERS in the earthmover data book

ADJUSTMENTS OF THE BASE PRESSURE

To improve stability, the following adjustments are possible:
Front axle, for a given load, it is possible to increase tyre pressure by 1 bar compared to the pressure determined by the methods presented above.
On the rear axle, it is recommended to use a pressure of 70% of the recommended value for the front axle.
These adjustments shall be made within the limits shown on page 25.

Important
During long road trips (delivery, transfer from one site to another), special precautions are necessary.
For more information, please consult your Michelin representative.

MICHELIN EARTHMOVER TYRES FOR WORKING MACHINES: DOZERS

HOW TO CALCULATE INFLATION PRESSURES

Depending on the type of work, tyres on a dozer are subjected to different types of loading.
- the load on the Front Axle is at the maximum when loading (pushing) a scraper.
- the load on the Rear axle is at the maximum when dozing or while stockpiling.

From a practical point of view, the maximum load on either of the two axles is approximately equal to 2/3 of the machine weight.

- **Using this method** to determine the load on each tyre
- **Use** the tables "Tyre loads and pressures" for LOADERS for the Rear unladen.

MICHELIN EARTHMOVER TYRES FOR WORKING MACHINES: GRADERS

HOW TO CALCULATE INFLATION PRESSURES

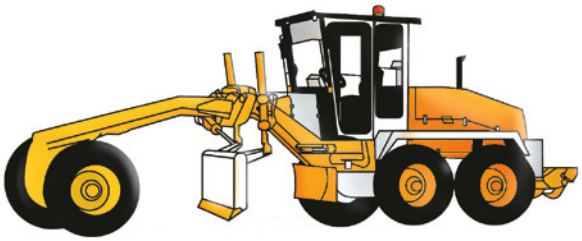

As a general rule, the minimal inflation pressure recommendation must never be lower than 2 bar (29 psi)
- **weigh the machine** to find out the load on each axle or use the loads given by the machine manufacturer.
- **use** the tables "Tyre loads and pressure" for GRADERS.

For special work (example: sloping embankments), the inflation pressure should never be lower than 2.5 bar (36 psi).

MICHELIN EARTHMOVER TYRES FOR COMPACTORS

XLC TYRES

The tyre and the working pressure depend on the material to be compacted, the type of work to be carried out and the operating speed.

Please refer to the information and operating guidelines supplied by the machine manufacturer and use the tables "Tyre loads and pressures" for COMPACTORS from the earthmover technical data book.

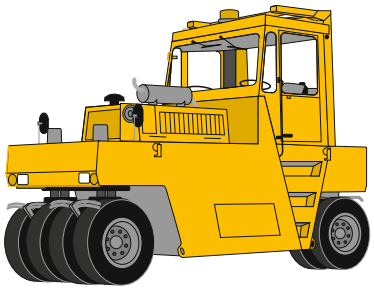

MICHELIN EARTHMOVER TYRES FOR ROADBUILDING MACHINERY (PLANERS, STABILIZER MIXERS, PAVERS)

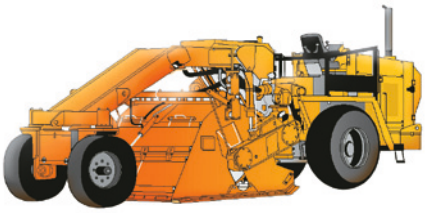

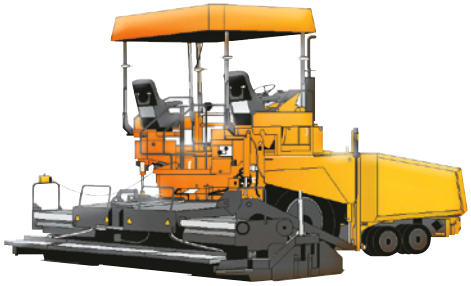

There are no tyres made specifically for this type of machinery.
Tyres should be chosen according to their average speed capabilities in relation to those of the machine and their load capacity.

All these machines operate at 2 speeds: a "transport" or "travelling" speed and a "work" speed.

Once the load per tyre has been determined, refer to the load/pressure table which corresponds best to the speed at which the selected tyre is to be used.

When we determined the tyre pressure in this two cases, we consistently apply the highest pressure. This is often pressure "transport".

HOW CALCULATE THE LOAD PER TYRE

If the load per axle is not known (no machine manufacturer's information available and no possibility of a physical weighing), follow the instructions below.

TRAVELLING MACHINES:

For cold Planers and Stabiliser Mixers: load per axle on pneumatic tyres = 50% of machine weight.
For Pavers: load per axle on pneumatic tyres = 80% of machine weight / number of axles.

LOADED/WORKING MACHINES:

For cold Planers and Stabiliser Mixers: load per axle = 50% of machine weight + payload.
For Pavers: load per axle on pneumatic tyres = 30% machine weight+ maximum load of the container bin / number of axles.

MICHELIN EARTHMOVER TYRES FOR UNDERGROUND MACHINES

HOW TO CALCULATE INFLATION PRESSURES

TRANSPORT MACHINES

- **determine** the maximum load on each tyre of each axle, with the machine loaded
  - by calculation, using the machine manufacturer's data, or
  - by weighing each tyre position with the machine loaded.
- **use** the tables "Tyre loads and pressures" for MINE TRANSPORT.

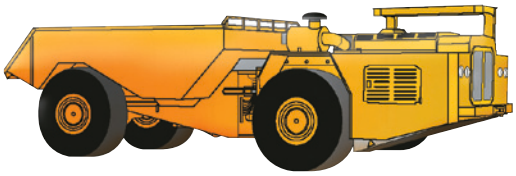

LOADERS

Apply the methods used for surface loaders (see the previous pages Chapter Michelin earthmover tyres for working machines: surface loaders).

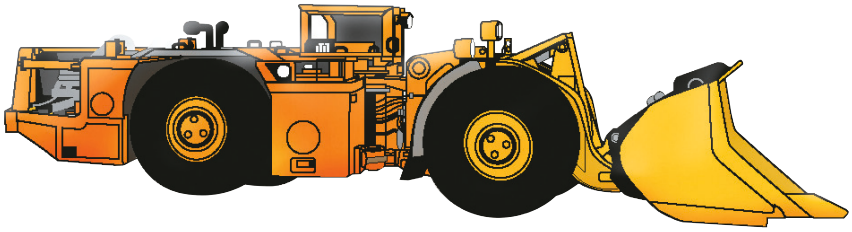

TYRES FOR TRANSPORT MACHINES: TKPH (TMPH) METHOD

FACTORS TO BE CONSIDERED WHEN SELECTING THE MOST APPROPRIATE TYRE:

CHOOSING THE IDEAL TYRE

This will depend on:
- the fitment possibilities offered by the machine manufacturer,
- the service conditions on the site. Factors such as load, speed, surface conditions, etc. must be considered.

THE MACHINE

- the tyre sizes,
- the loads the tyres have to carry (laden and unladen).

THE SITE

- type of surface, condition and profile of haul-roads,
- type and condition of loading and tipping areas.

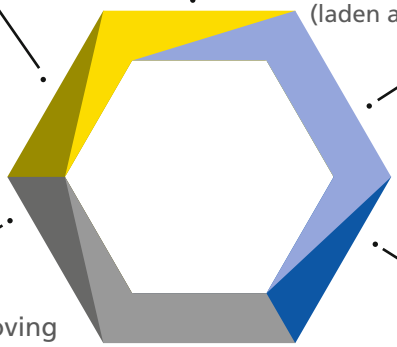

TYRE BEHAVIOUR

- how are the tyres wearing?
- what are the main reasons for removing a tyre from service?
- are there sidewall or tread problems?

MACHINE OPERATION ON THE SITE

- length of the cycle (laden trip / unladen trip),
- maximum number of cycles during a working period or shift,
- duration of the working period or shift.

PROBLEMS THAT MAY ARISE

- how does the machine / tyre combination behave? (for example, traction).

TKPH (TMPH) definition:
The TKPH (Ton Kilometre Per Hour) or TMPH (Ton Mile Per Hour) is an expression of the working capacity of a tyre.
The TKPH (TMPH) is a function of the maximum allowed internal operating temperature of a tyre.

TYRE TKPH OR TYRE TMPH

A tyre's TKPH (TMPH) depends on its design and varies according to size and type.
TKPH (TMPH) values are given along with other Michelin tyre characteristics.
It is a function of load and the number of kilometres (miles) covered per hour at an ambient temperature of 38° C (100° F).
The formula to convert a TKPH rating to a TMPH rating is:
TMPH = TKPH x 0,685
TMPH calculation is based on the "short ton" which corresponds to 2000 lbs or 907 kg.

BASIC SITE TKPH OR TMPH

This value reflects the specific requirements of a site and can be obtained by using the following formula:
Basic site TKPH (basic site TMPH) = Qm x Vm
where Qm = average load per tyre
Vm = average cycle speed, in km (or miles) per hour

AVERAGE LOAD PER TYRE (QM)

Average load per tyre (Qm):

$$Qm = \frac{Qc + Qv}{2}$$

where Qc = is the load per tyre in ton (TKPH), or in short ton (TMPH), on a laden vehicle.
Qv = is the load per tyre in ton (TKPH), or in short ton (TMPH), on an unladen vehicle.

The Qm calculation should theoretically be made for each tyre. However, in practice, specific tyre loads are not normally available and therefore this leads to the assumption that each tyre on the same axle carries an equal load. When calculating the average load per tyre on the front and the rear axles, the greatest value of Qm shall be used in TKPH (TMPH) calculation.

In most cases, on two-axle dump trucks, the distribution of the total load of the loaded vehicle (unladen weight + payload) corresponds to 33.3 % on the front axle (single tyres) and 66.7 % on the rear axle (twinned tyres).
When unladen, the front axle is almost always the heaviest. Thus, the maximum Qm, will nearly always be on the front axle.

Caution: ensure that load distribution Front/Rear is even

Of course, the analysis of the site (or at least, the collected information), weighings and machine characteristics, will provide the information to define and check the load per tyre.

THE NUMBER OF KM (OR NUMBER OF MILES) COVERED ON THE REFERENCE CYCLE

This is obtained by using the relationship:

$$Vm = \frac{L}{H}$$

where L = is the cycle length in kilometres (TKPH), or in miles (TMPH).
The reference cycle must be the one with the highest average speed.
H = is the duration of cycle in hour.

REAL SITE TKPH OR REAL SITE TMPH

The Qm x Vm formula is used to calculate the basic site TKPH (or TMPH).

To obtain the real site TKPH (or TMPH), two more factors must be taken into account:
- the length of cycles exceeding 5 kilometres (or 3 miles)
- the ambient temperature.

CYCLE LENGTH - K1 COEFFICIENT

For cycle lengths exceeding 5 kilometers (or 3 miles) apply to the basic site TKPH (or basic site TMPH) the K1 coefficient, the values of which are given on following pages.

SITE AMBIENT TEMPERATURE (TA) - K2 COEFFICIENT

The standard ambient temperature is 38°C (100° F). For a given speed, a site temperature higher than 38°C increases the real site TKPH (or TMPH). Conversely, a temperature lowers than 38° C decreases the real site TKPH (or TMPH).

The K2 coefficient
where Vm is the reference cycle average speed on the site in km/h for TKPH and in mph for TMPH,
TA is the ambient temperature, in °C for TKPH and in °F for TMPH
TR is the reference temperature (38° C for TKPH and 100° F for TMPH)

Is to apply to the basic site TKPH (basic site TMPH).
Its calculation depends on whether the ambient temperature of the basic site is above or below 38°C (100°F)

if **TA < 38 °C** (100 °F)

$$K2 = \frac{1}{1 - \frac{[\,0{,}25^{*} \times (TA - TR)\,]}{Vm}}$$

(: use 0.086 instead of 0.25 when calculating basic site TMPH)*

If **TA > 38 °C** (100 °F)

$$K2 = \frac{1}{1 - \frac{[\,0{,}40^{*} \times (TA - TR)\,]}{Vm}}$$

(: use 0.138 instead of 0.40 when calculating basic site TMPH)*

The ambient temperature of the site (TA) to be taken into account is "the maximum temperature in the shade" during the hottest period.
For temperatures TA greater than 15° C (59° F), use the K2 coefficients shown on the following pages.
For temperatures TA lower than 15° C (59° F), use the K2 coefficients shown in the shaded area of the table on the following pages.
To sum up, for the real site TKPH (TMPH) calculation, proceed as follows:
- calculate the basic site TKPH (TMPH).
- calculate the correct for cycle length exceeding 5 kilometres (3 miles) by applying the K1 coefficient.
- calculate the correct for ambient temperatures not equal to 38° C (100° F) by applying the K2 coefficient.

Real site TKPH (or TMPH) = Basic site TKPH (or basic site TMPH) x K1 x K2

COMPARISON OF THE TYRE TKPH (TMPH) AND REAL SITE TKPH (TMPH)

On the basis that the choice of tread pattern is made to meet the needs of traction, protection and speed there are 2 possibilities:

a) the tyre's TKPH (TMPH) is greater than the real site TKPH (TMPH): the tyre is suitable for the application.
b) the tyre's TKPH (TMPH) is below the real site TKPH (TMPH): the tyre is not suitable for the application.

In case b:
- Check if another tread pattern or type may be used.
- See if a modification of operating conditions is possible. (reduction of load and/or reduction of speed, reduced number of cycles in the same time period, etc.).

EXAMPLE OF A SITE TKPH (TMPH) CALCULATION

The data to calculate the real site TKPH (TMPH) where a RDT is fitted with 37.00 R 57 tyre is as follows:

- well kept but abrasive haul roads;
- average payload: 180 tons (198.5 short ton); mine value
- reference cycle: 21 km (12.8 miles);
- unladen weight Front: 64 tons (70.6 short ton)
- duration of cycle: 1 hour 15 minutes ; H = 1 +(15 / 60) = 1,25 hour;
- unladen weight Rear: 57 tons (62.8 short ton)
- ambient temperature: TA = 42° C (107.6° F);
- distribution of total laden weight: Front = 33.3% Rear = 66.7%

CALCULATION OF QM (AVERAGE TYRE LOAD)

	(TKPH)	(TMPH)
- Gross vehicle weight (GVW)	180 + 64 + 57 = 301 tons	198.5 + 70.6 + 62.8 = 332 short tons
- Unladen weight per tyre - Front; Qv:	$\frac{64}{2}$ = 32 tons	$\frac{70,6}{2}$ = 35 short tons
- Laden weight per tyre - Front; Qc: *(33.3% of GW on front axle)*	$\frac{301 \times 33.3}{2 \times 100}$ ~ 50 tons	$\frac{332 \times 33.3}{2 \times 100}$ = 55 short tons
- Average tyre load, Qm Front:	$\frac{32 + 50}{2}$ = 41 tons	$\frac{35 + 55}{2}$ = 45 short tons
- Unladen weight per tyre - Rear; Qv:	$\frac{57}{4}$ = 14 tons	$\frac{62,8}{4}$ = 15.5 short tons
- Laden weight per tyre Rear; Qc: *(66.7% of Gross Vehicle weight on rear axle)*	$\frac{301 \times 66.7}{4 \times 100}$ ~ 50 tons	$\frac{332 \times 66.7}{4 \times 100}$ = 55 short tons
- Average tyre load, Qm Rear:	$\frac{14 + 50}{2}$ = 32 tons	$\frac{15.5 + 55}{2}$ = 35 short tons
Thus, the value for Qm to be used will be:	**41 tons**	**45 short tons**

CALCULATION OF VM (DISTANCE COVERED PER HOUR)

$Vm = \frac{L}{H}$	$\frac{21}{1,25}$ = **16.8 km** in one hour	$\frac{12.8}{1,25}$ = **10.2 miles** in one hour

BASIC SITE TKPH (TMPH)

TKPH (TMPH) = Qm x Vm	41 x 17 = **689**	45 x 10,6 = **459**

CALCULATION OF K1 COEFFICIENT

Beyond 5 km / h, the cycle length has an influence on the real site TKPH.

The cycle is greater than 5 km (3 miles), the coefficient K1 corresponding to 21 km (12.8 miles) which is the reference cycle starts, is: **1.19** (value on next page) for the calculation of TKPH and TMPH.

VALUE OF THE K2 COEFFICIENT

Ambient temperatures different of 38 ° C (100 ° F) has an influence on the real site TKPH.

You can use the table on the opposite page, to find the K2 coefficient (in TKPH units), by interpolation for your actual reference cycle average speed and ambient temperature. In this case, for Vm = 17 km/h (10.6 mph) and TA = 42°C (107.6 °F), we find K2 = 1.105

Calcul of the K2 coefficient

In our example, the ambient temperature is 42 ° C (107.6 ° F). The calculation of the coefficient K2 is as follows:

$K2 = \frac{1}{1 - \frac{[\,0,40^* \times (TA - TR)\,]}{Vm}}$	$\frac{1}{1 - \frac{[\,0,40^* \times (42 - 38)\,]}{16.8}} = 1.105$	$\frac{1}{1 - \frac{[\,0,138^* \times (107.6 - 100)\,]}{10.2}} = 1.114$

(: Use 0.138 instead of 0.4 for the calculation of TMPH)*

REAL SITE TKPH (TMPH)

Applying the K1 and K2 coefficients to the basic site TKPH (TMPH) gives the real site TKPH (TMPH).

	689 x 1.19 x 1.105 = **906**	459 x 1.19 x 1.114 = **608**

TYRE TKPH (TMPH) / REAL SITE TKPH (TMPH) COMPARISON

In the 37.00 R 57 XDR size	the different tyre TKPH values are: B4 = 848 B = 1018 C4 = 1145 C = 1272	the different tyre TMPH values are: B4 = 581 B = 698 C4 = 784 C = 871

In our example, the B4 type is not suitable. All other types of compound are possible.

The tracks being abrasive and the loading and unloading areas being aggressive, our choice will be the B type.

(See definitions of types, page 7).

MICHELIN EARTHMOVER TYRES FOR TRANSPORT MACHINES
K COEFFICIENT CALCULATED AND USED FOR THE TKPH (TMPH) METHOD

K1 COEFFICIENTS

L (km)	L (ml)	K1	L (km)	L (ml)	K1	L (km)	L (ml)	K1	L (km)	L (ml)	K1	L (km)	L (ml)	K1
			11	6.8	1.13	**21**	13	1.19	**31**	19.3	1.21	**41**	25.5	1.23
			12	7.4	1.14	**22**	13.7	1.19	**32**	19.9	1.21	**42**	26.1	1.23
			13	8	1.15	**23**	14.3	1.20	**33**	20.5	1.22	**43**	26.7	1.23
			14	8.7	1.16	**24**	14.9	1.20	**34**	21.1	1.22	**44**	27.3	1.23
5	3.1	1.00	**15**	9.3	1.16	**25**	15.5	1.20	**35**	21.7	1.22	**45**	28	1.23
6	3.7	1.04	**16**	9.9	1.17	**26**	16.2	1.20	**36**	22.4	1.22	**46**	28.6	1.23
7	4.3	1.06	**17**	10.6	1.17	**27**	16.8	1.21	**37**	23	1.22	**47**	29.2	1.23
8	5	1.09	**18**	11.2	1.18	**28**	17.4	1.21	**38**	23.6	1.22	**48**	29.8	1.23
9	5.6	1.10	**19**	11.8	1.18	**29**	18	1.21	**39**	24.2	1.22	**49**	30.4	1.23
10	6.2	1.12	**20**	12.4	1.19	**30**	18.6	1.21	**40**	25	1.22	**50**	31	1.23

L = Cycle length in kilometres and in miles.

K2 COEFFICIENTS

Vm Km (miles)	Ambient temperature														
	15 °C	**17,5 °C**	**20 °C**	**22,5 °C**	**25 °C**	**27,5 °C**	**30 °C**	**32,5 °C**	**35 °C**	**37,5 °C**	**40 °C**	**42,5 °C**	**45 °C**	**47,5 °C**	**50 °C**
	59 °F	**63,5 °F**	**68 °F**	**72,5 °F**	**77 °F**	**81,5 °F**	**86 °F**	**90,5 °F**	**95 °F**	**99,5 °F**	**104 °F**	**108,5 °F**	**113 °F**	**117,5 °F**	**122 °F**
10 (6)	0,635	0,661	0,690	0,721	0,755	0,792	0,833	0,879	0,930	0,988	1,087	1,220	1,389	1,613	1,923
12 (7)	0,676	0,701	0,727	0,756	0,787	0,821	0,857	0,897	0,941	0,990	1,071	1,176	1,304	1,463	1,667
14 (9)	0,709	0,732	0,757	0,783	0,812	0,842	0,875	0,911	0,949	0,991	1,061	1,148	1,250	1,373	1,522
16 (10)	0,736	0,757	0,780	0,805	0,831	0,859	0,889	0,921	0,955	0,992	1,053	1,127	1,212	1,311	1,429
18 (11)	0,758	0,778	0,800	0,823	0,847	0,873	0,900	0,929	0,960	0,993	1,047	1,111	1,184	1,268	1,364
20 (12,5)	0,777	0,796	0,816	0,838	0,860	0,884	0,909	0,936	0,964	0,994	1,042	1,099	1,163	1,235	1,316
21 (13)	0,785	0,804	0,824	0,844	0,866	0,889	0,913	0,939	0,966	0,994	1,040	1,094	1,154	1,221	1,296
22 (14)	0,793	0,811	0,830	0,850	0,871	0,893	0,917	0,941	0,967	0,994	1,038	1,089	1,146	1,209	1,279
24 (15)	0,807	0,824	0,842	0,861	0,881	0,901	0,923	0,946	0,970	0,995	1,034	1,081	1,132	1,188	1,250
26 (16)	0,819	0,835	0,852	0,870	0,889	0,908	0,929	0,950	0,972	0,995	1,032	1,074	1,121	1,171	1,226
28 (17)	0,830	0,845	0,862	0,878	0,896	0,914	0,933	0,953	0,974	0,996	1,029	1,069	1,111	1,157	1,207
30 (19)	0,839	0,854	0,870	0,886	0,902	0,920	0,938	0,956	0,976	0,996	1,027	1,064	1,103	1,145	1,190
32 (20)	0,848	0,862	0,877	0,892	0,908	0,924	0,941	0,959	0,977	0,996	1,026	1,060	1,096	1,135	1,176
34 (21)	0,855	0,869	0,883	0,898	0,913	0,928	0,944	0,961	0,978	0,996	1,024	1,056	1,090	1,126	1,164
36 (22)	0,862	0,875	0,889	0,903	0,917	0,932	0,947	0,963	0,980	0,997	1,023	1,053	1,084	1,118	1,154
38 (24)	0,869	0,881	0,894	0,907	0,921	0,935	0,950	0,965	0,981	0,997	1,022	1,050	1,080	1,111	1,145
40 (25)	0,874	0,886	0,899	0,912	0,925	0,938	0,952	0,967	0,982	0,997	1,020	1,047	1,075	1,105	1,136
42 (26)	0,880	0,891	0,903	0,916	0,928	0,941	0,955	0,968	0,982	0,997	1,019	1,045	1,071	1,099	1,129
44 (27)	0,884	0,896	0,907	0,919	0,931	0,944	0,957	0,970	0,983	0,997	1,019	1,043	1,068	1,095	1,122
46 (28)	0,889	0,900	0,911	0,922	0,934	0,946	0,958	0,971	0,984	0,997	1,018	1,041	1,065	1,090	1,117
48 (29)	0,893	0,904	0,914	0,925	0,937	0,948	0,960	0,972	0,985	0,997	1,017	1,039	1,062	1,086	1,111
50 (31)	0,897	0,907	0,917	0,928	0,939	0,950	0,962	0,973	0,985	0,998	1,016	1,037	1,059	1,082	1,106

Vm = number of km (miles) **covered per hour.**

Interpolation is allowed between the temperatures shown in the column headings.

MICHELIN EARTHMOVER TYRES FOR SPECIFIC USES

1°) Firstly, if the dimension exists for your machine and your use, you must use it (example: Mechanical handling tyres for handling use; heavy truck tyres for construction use or for builder use, ...)

2°) For all other cases, you must contact your Michelin representative.

APPROXIMATE LOOSE MATERIAL DENSITIES UNITS OF MEASURE AND CONVERSION TABLES

APPROXIMATE LOOSE MATERIAL DENSITIES (t/m³)

MATERIAL	DENSITY	MATERIAL	DENSITY
Alkaline potash	1.3 to 1.5	Copper ore	1.6
Anthracite	0.9 to 1.1	Iron ore	2.4 to 3.3
Clay (dry)	1 to 1.1	Pyrites	2.6
Clay (moist)	1.2 to 1.3	Earth dry	1.2 to 1.5
Clay (wet)	1.3 to 1.4	Earth moist	1.3 to 1.4
Bauxite	1.5	Earth wet	1.4 to 1.5
Mud	1.8	Overburden	1.7 to 1.8
Limestone	1.5 to 1.6	75% rock - 25% earth	1.9 to 2
Coal	0.7	50% rock - 50% earth	1.7 to 1.8
Quick-lime	0.9 to 1.3	25% rock - 75% earth	1.6
Slaked lime	1.1 to 1.3		
Chalk	1.8 to 2.6	Sand dry	1.5
Granite	1.6 to 1.7	Sand moist	1.9
Sandstone	1.6	Gravel dry	1.7 to 1.8
Crushed gypsum	1.6	Gravel moist	2
Marl clay	2.2		

UNITS OF MEASURE AND CONVERSION TABLES

MEASUREMENT	ABBREVIATION	CONVERSION FACTOR	ABBREVIATION	MEASUREMENT	CONVERSION FACTOR	ABBREVIATION
TORQUE						
pound-foot	lb ft	x 0.1383	= m kg	kilogamme metre	x 7.233	= lb ft
kilogamme metre	m kg	x 9.81	= m N	Newton metre	x 0.102	= m kg
LENGTH						
inch	in	x 0.0254	= m	metre	x 39.37	= in
foot	ft	x 0.3048	= m	metre	x 3.281	= ft
yard	yd	x 0.9144	= m	metre	x 1.0936	= yd
mile	ml	x 1.6093	= km	kilometre	x 0.6214	= ml
LOAD						
pound	lb	x 0.4536	= kg	kilogramme	x 2.205	= lb
long ton (G.B.) 2240 lb	lg ton	x 1.016	= t	metric tonne	x 0.984	= lg ton
short ton (U.S.) 2000 lb	sh ton	x 0.907	= t	metric tonne	x 1.103	= sh ton
DENSITY						
pound per cubic foot	lb/cu ft	x 16.0184	= kg/m³	kilogramme/m³	x 0.625	= lb/cu ft
pound per cubic yard	lb/cu yd	x 0.5933	= kg/m³	kilogramme/m³	x 1.686	= lb/cu yd
PRESSURE						
kilo-pascal	kPa	x 0.01	= bar	bar	x 100	= kPa
atmosphere (at sea level)	atm	x 0.986	= bar	bar	x 1.014	= atm
pound per square inch	P.S.I.	x 0.0703	= kg/cm²	kilogramme/cm²	x 14.22	= P.S.I.
pound per square inch	P.S.I.	x 0.069	= bar	bar	x 14.513	= P.S.I.
pound per square inch	P.S.I.	x 0.068	= atm	atmosphere	x 14.7	= P.S.I.
pound per square inch	P.S.I.	x 6.895	= kPa	kilo Pascal	x 0.145	= P.S.I.
POWER						
french horse power	C.V.	x 0.7355	= KW	kilowatt	x 1.36	= C.V.
horse power	H.P.	x 0.7457	= KW	kilowatt	x 1.34	= H.P.
french horse power	C.V.	x 0.98	= H.P.	horse power	x 1.014	= C.V.
VOLUME/CAPACITY						
cubic foot	cu ft	x 0.02832	= m³	cubic metre	x 35.31	= cu ft
cubic yard	cu yd	x 0.7646	= m³	cubic metre	x 1.308	= cu yd
gallon (U.S.)	gal	x 3.7854	= l	liter	x 0.2642	= gal
TEMPERATURE						
degree fahrenheit	°F	- 32 et x (5/9)	= °C	degree Celsius	x (9/5) et + 32	= °F

(also see p.23)

1/ see page ... **7 and 102** ..... *explanation about TKPH (TMPH)*

2/ see page ..... **21** ..... *explanation of the different characteristics*

3/ ..... *explanation about rim size marking*

example: ..... *44.00/5.0 [6.0]*
the 1st value indicates rim width in inch)
(in this example: 44 inches)
the 2nd value indicates the height of the rim flange
(in this example: 5 inches)
the 3rd value indicates the width of the rim flange
(in this example: 6 inches)

4/ see page ..... **84** ..... *information and explanation about components used with Michelin earthmover tyres*

5/ ..... *increase pressure by 0,5 bar on the loader front axle*

6/ see page ..... **16** ..... *and in the EARTHMOVER TYRE USE AND MAINTENANCE GUIDE BY MICHELIN explanation about TG rim*

7/ ..... *tyre under development or currently subject to an ETRTO experimental standard*

8/ ..... *fabrication is discontinued (commercial description highlighted to attract attention)*

9/ ..... *special order only (commercial description highlighted to attract attention)*
Consult your local Michelin representative

10/ see pages ..... **23 to 25, 96 to 106** .....
explanation of the various tables
of load according to the use and to the tyre position
and how to determine pressures
It is imperative to follow the explanation given
Not following these instructions may impact tyre performance

11/ see page ..... **5** ..... *standardized usage codes*

12/ ..... *never exceed 6 bar*

13/ ..... *The removable flange must be continous along its circumference, with no opening*


OPTION

YOUR **CONTACTS**

MICHELIN
A better way forward

Europe
Manufacture Française
des Pneumatiques Michelin
23, place des Carmes-Déchaux
63040 Clermont-Ferrand Cdx 09
France
Tél. : + 33 4 73 32 20 00

North America
Michelin North America, Inc.
One Parkway South
PO Box 19001
Greenville, SC 29602
USA
Tel: + 1 864 458 5000

Africa/India/ Middle East
Michelin AIM FZE
JAFZA LOB 14, 5th floor
P.O.Box 263034
Jebel Ali Free Zone
Dubai, UAE
Tel: + 971 4 8078111

China
MICHELIN (China) Investment
Co. Ltd.
Dawning Center
Tower B (East Tower, 16th floor)
500 Hongbaoshi Road
Shanghaï 201103
RP China
Tel: + 86 (21) 22 19 08 88

Eastern Europe
MICHELIN - MOSCOW
Smolnaya street
24D (2sd floor)
125445 Moscou
Russia
Tel: +7 495 258 09 26

South America
Sociedad Michelin
de Participaçoes
Industrial e Commercial Ltda
Avenida das Americas - Bloco 4
Barra Da Tijuca
Río de Janeiro (RJ)
CEP 22640-100
Brasil
Tel: + 55 (21) 36 21 46 46

South East Asia/ New Zealand/ Australia
MICHELIN Australia Pty Ltd
51-57 Fennell Street
Port Melbourne
(Victoria 3207)
Australia
Tel: + 61 3 86 71 10 03

Korea / Japan
MICHELIN (China) Investment
Co. Ltd.
Dawning Center
Tower B (East Tower, 16th floor)
500 Hongbaoshi Road
Shanghaï 201103
RP China
Tel: + 86 (21) 22 19 08 88

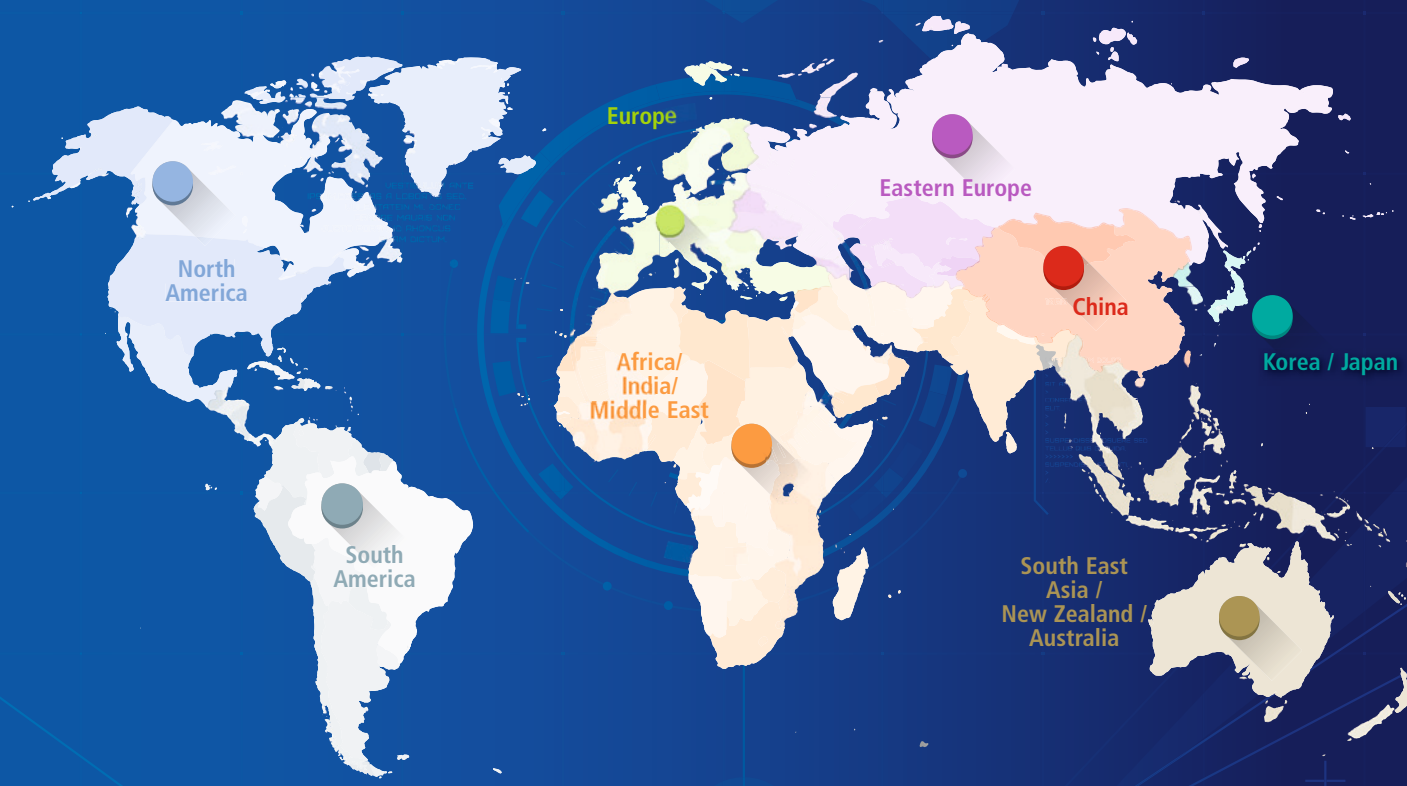

For more information about our products, maintenance and safety advice, or to find your nearest dealer, visit

www.michelinearthmover.com

FUSIUM imprimeur (Auvergne - France) F33459 - Tél. 04 73 73 25 25 - 855 200 507 RCS Clermont-Ferrand - EFCM 7261-Gb (2016) - Réf n° 050569X